Agilent 4291B RF Impedance/Material Analyzer

Quick Start Guide

SERIAL NUMBERS

This manual applies directly to instruments with serial number prefix JP1KE and above, or whose firmware is version 1.xx. For additional important information about serial numbers, read “Serial Number” in Appendix A of this manual.

Agilent Technologies

Agilent Part No. 04291-90031
Printed in JAPAN March 2001

Notice

The information contained in this document is subject to change without notice.

This document contains proprietary information that is protected by copyright. All rights are reserved. No part of this document may be photocopied, reproduced, or translated to another language without the prior written consent of the Agilent Technologies.

Agilent Technologies Japan, Ltd.
Component Test PGU-Kobe
1-3-2, Murotani, Nishi-ku, Kobe-shi,
Hyogo, 651-2241 Japan

MS-DOS® is a U.S. registered trademark of Microsoft Corporation.
APC-7® is a U.S. registered trademark of Bunker Ramo Corporation.

© Copyright 1997, 1998, 1999, 2001 Agilent Technologies Japan, Ltd.

Manual Printing History

The manual printing date and part number indicate its current edition. The printing date changes when a new edition is printed. (Minor corrections and updates that are incorporated at reprint do not cause the date to change.) The manual part number changes when extensive technical changes are incorporated.

December 1997 ..... First Edition (part number: 04291-90021)

December 1998 .....Second Edition (part number: 04291-90031)

December 1999 .....Third Edition (part number: 04291-90031)

March 2001 ..... Fourth Edition (part number: 04291-90031)

Safety Summary

The following general safety precautions must be observed during all phases of operation, service, and repair of this instrument. Failure to comply with these precautions or with specific *WARNINGS* elsewhere in this manual may impair the protection provided by the equipment. In addition it violates safety standards of design, manufacture, and intended use of the instrument.
The Agilent Technologies assumes no liability for the customer's failure to comply with these requirements.

Note

4291B comply with INSTALLATION CATEGORY II and POLLUTION DEGREE 2 in IEC1010-1. 4291B are INDOOR USE product.

Note

LEDs in 4291B are Class 1 in accordance with IEC825-1.
CLASS 1 LED PRODUCT

Ground The Instrument

To avoid electric shock hazard, the instrument chassis and cabinet must be connected to a safety earth ground by the supplied power cable with earth blade.

DO NOT Operate In An Explosive Atmosphere

Do not operate the instrument in the presence of flammable gasses or fumes. Operation of any electrical instrument in such an environment constitutes a definite safety hazard.

Keep Away From Live Circuits

Operating personnel must not remove instrument covers. Component replacement and internal adjustments must be made by qualified maintenance personnel. Do not replace components with the power cable connected. Under certain conditions, dangerous voltages may exist even with the power cable removed. To avoid injuries, always disconnect power and discharge circuits before touching them.

DO NOT Service Or Adjust Alone

Do not attempt internal service or adjustment unless another person, capable of rendering first aid and resuscitation, is present.

DO NOT Substitute Parts Or Modify Instrument

Because of the danger of introducing additional hazards, do not install substitute parts or perform unauthorized modifications to the instrument. Return the instrument to a Agilent Technologies Sales and Service Office for service and repair to ensure that safety features are maintained.

Dangerous Procedure Warnings

Warnings , such as the example below, precede potentially dangerous procedures throughout this manual. Instructions contained in the warnings must be followed.

Warning

Dangerous voltages, capable of causing death, are present in this instrument. Use extreme caution when handling, testing, and adjusting this instrument.

Safety Symbols

General definitions of safety symbols used on equipment or in manuals are listed below.

Instruction manual symbol: the product is marked with this symbol when it is necessary for the user to refer to the instruction manual.

Alternating current.

Direct current.

On (Supply).

Off (Supply).

In position of push-button switch.

Out position of push-button switch.

Frame (or chassis) terminal. A connection to the frame (chassis) of the equipment which normally include all exposed metal structures.

Warning This **Warning** sign denotes a hazard. It calls attention to a procedure, practice, condition or the like, which, if not correctly performed or adhered to, could result in injury or death to personnel.

Caution This **Caution** sign denotes a hazard. It calls attention to a procedure, practice, condition or the like, which, if not correctly performed or adhered to, could result in damage to or destruction of part or all of the product.

Note This **Note** sigh denotes important information. It calls attention to a procedure, practice, condition or the like, which is essential to highlight.

Affixed to product containing static sensitive devices use anti-static handling procedures to prevent electrostatic discharge damage to component.

Typeface Conventions

Bold	Boldface type is used when a term is defined. For example: **icons** are symbols.
Italics	Italic type is used for emphasis and for titles of manuals and other publications.
	Italic type is also used for keyboard entries when a name or a variable must be typed in place of the words in italics. For example: `copy` *filename* means to type the word `copy`, to type a space, and then to type the name of a file such as `file1`.
`Computer`	Computer font is used for on-screen prompts and messages.
HARDKEYS	Labeled keys on the instrument front panel are enclosed in ▢.
SOFTKEYS	Softkeys located to the right of the LCD are enclosed in ▢.

Certification

Agilent Technologies certifies that this product met its published specifications at the time of shipment from the factory. Agilent Technologies further certifies that its calibration measurements are traceable to the United States National Institute of Standards and Technology, to the extent allowed by the Institution's calibration facility, or to the calibration facilities of other International Standards Organization members.

Warranty

This Agilent Technologies instrument product is warranted against defects in material and workmanship for a period of one year from the date of shipment, except that in the case of certain components listed in *General Information* of this manual, the warranty shall be for the specified period. During the warranty period, Agilent Technologies will, at its option, either repair or replace products that prove to be defective.

For warranty service or repair, this product must be returned to a service facility designated by Agilent Technologies. Buyer shall prepay shipping charges to Agilent Technologies and Agilent Technologies shall pay shipping charges to return the product to Buyer. However, Buyer shall pay all shipping charges, duties, and taxes for products returned to Agilent Technologies from another country.

Agilent Technologies warrants that its software and firmware designated by Agilent Technologies for use with an instrument will execute its programming instruction when property installed on that instrument. Agilent Technologies does not warrant that the operation of the instrument, or software, or firmware will be uninterrupted or error free.

Limitation Of Warranty

The foregoing warranty shall not apply to defects resulting from improper or inadequate maintenance by Buyer, Buyer-supplied software or interfacing, unauthorized modification or misuse, operation outside the environmental specifications for the product, or improper site preparation or maintenance.

No other warranty is expressed or implied. Agilent Technologies specifically disclaims the implied warranties of merchantability and fitness for a particular purpose.

Exclusive Remedies

The remedies provided herein are buyer's sole and exclusive remedies. Agilent Technologies shall not be liable for any direct, indirect, special, incidental, or consequential damages, whether based on contract, tort, or any other legal theory.

Assistance

Product maintenance agreements and other customer assistance agreements are available for Agilent Technologies products.

For any assistance, contact your nearest Agilent Technologies Sales and Service Office. Addresses are provided at the back of this manual.

Contents

1. Introduction
Using This Manual 1-1
Brief Description of the 4291B 1-3
Additional Features 1-3

2. Installation and Set Up Guide
Incoming Inspection 2-1
Power Requirements 2-5
Power Cable 2-5
⚠ Replacing the Fuse 2-7
Fuse Selection 2-7
Procedure 2-7
Operation Conditions 2-8
Ventilation Requirements 2-8
Instruction for Cleaning 2-8
Rack Mounting 2-8
Rack/Handle Installation 2-9
Option 1CN Handle Kit 2-9
Installing the Handle 2-9
Option 1CM Rack Mount Kit 2-9
Mounting the Rack 2-9
Option 1CP Rack Mount & Handle Kit 2-10
Mounting the Handle and Rack 2-10
Connecting the Test Station 2-11
Connecting the Test Head 2-12
Selecting the Test Head 2-12
Connecting the Test Head to the Test Station 2-12
Connecting a BNC Adapter (Option 1D5 Only) 2-13
Connecting a Keyboard 2-13

3. Impedance Measurement Quick Start
Overview 3-1
Basic Measurement Flow 3-2
Required Equipment 3-3
1. Power ON 3-4
2. Calibration 3-4
Calibration Procedure 3-5
3. Connecting the Test Fixture 3-8
Selecting a Test Fixture 3-8
Connecting the Test Fixture to the Test Head 3-9
4. Setting the Electrical Length of the Test Fixture . . . 3-10
5. Fixture Compensation 3-11
Performing SHORT Compensation 3-12
Selecting the Shorting Device 3-12
SHORT Compensation Key Sequence 3-14

Performing OPEN Compensation 3-14
OPEN Compensation Key Sequence 3-14
6. Connecting the DUT to the Test Fixture 3-15
7. Setting up the Analyzer 3-15
7-1. Setting up for |Z|-θ vs. Frequency 3-16
7-2. Setting up for C - D vs. Frequency 3-17
7-3. Setting up for C - D vs. OSC Level 3-18
7-4. Setting up for C - D vs. dc-V (Option 001 only) . . 3-19
Display Annotations 3-20
8. Measuring the DUT 3-21
Performing Automatic Scaling 3-21
9. Analyzing a Measurement Result 3-21
Using the Marker 3-21
Reading a Measured Value 3-21
Moving the Marker to the Minimum Point 3-22
Clearing the Marker 3-23
Equivalent Circuit Analysis 3-23
Approximation 3-23
Simulation 3-24
Clearing the Approximated Constant Data 3-24
Clearing the Simulated Data 3-25
10. Measuring Other DUT 3-25
For More Information 3-25

4. Dielectric Material Measurement Quick Start
Overview 4-1
Brief Measurement Theory 4-2
Basic Measurement Flow 4-3
Required Equipment 4-4
1. Power ON 4-5
2. Calibration 4-5
Calibration Procedure 4-6
3. Connecting the Test Fixture 4-9
Connecting the Test Fixture to the Test Head 4-9
Selecting the Test Fixture 4-10
4. Input Load Thickness 4-11
5. Fixture Compensation 4-12
Performing SHORT Compensation 4-12
SHORT Compensation Key Sequence 4-12
Performing OPEN Compensation 4-13
OPEN Compensation Key Sequence 4-13
Performing LOAD Compensation 4-14
LOAD Compensation Key Sequence 4-14
6. Input the MUT Thickness 4-15
7. Placing the MUT in the Test Fixture 4-15
8. Setting up the Analyzer 4-16
8-1. Setting up for ε_r' - tan δ vs. Frequency 4-17
Display Annotations 4-18
8-2. Setting up for a Cole-Cole Plot 4-19
Display Annotations 4-20
9. Measuring the MUT 4-21
Performing Automatic Scaling 4-21
Using the Marker 4-21
Marker for Frequency/OSC Level/dc bias
Characteristics 4-21

Marker for a Cole-Cole Plot 4-22
10. Measuring Other MUTs 4-22
For More Information 4-22

5. Magnetic Material Measurement Quick Start
Overview 5-1
Brief Measurement Theory 5-2
Basic Measurement Flow 5-3
Required Equipment 5-4
1. Power ON 5-5
2. Calibration 5-5
Calibration Procedure 5-6
3. Connecting the Test Fixture 5-9
Selecting Fixture and Holder 5-9
Connecting the Test Fixture to the Test Head 5-9
Selecting the Test Fixture 5-11
4. Fixture Compensation 5-11
Performing SHORT Compensation 5-11
SHORT Compensation Key Sequence 5-12
5. Input the MUT Size 5-12
6. Placing the MUT on the Test Fixture 5-13
7. Setting up the Analyzer 5-14
7-1. Setting up for $\mu_r' - \mu_r''$ vs. Frequency 5-15
7-2. Setting up for $\mu_r' - \mu_r''$ vs. OSC Level 5-16
7-3. Setting up for $\mu_r' - \mu_r''$ vs. Dc-I (Option 001 only) 5-17
Display Annotations 5-18
8. Measuring the MUT 5-19
Performing Automatic Scaling 5-19
9. Analyzing a Measurement Result 5-19
Using the Marker 5-19
Reading a Measured Value 5-19
Moving the Marker to the Maximum Point 5-20
Clearing the Marker 5-21
10. Measuring Other MUTs 5-21
For More Information 5-21

6. Features Common to All Modes
Performing User Defined Calibration 6-2
User Defined Calibration Description 6-2
Performing User Defined Fixture Compensation 6-3
User Defined Fixture Compensation Description . . . 6-3
Performing Averaging 6-3
Performing Point Averaging 6-3
Performing Sweep Averaging 6-4
Averaging Description 6-4
Using Point Delay and Sweep Delay 6-5
Making a Point Delay Measurement 6-5
Making a Sweep Delay Measurement 6-5
Delay Description 6-5
Changing the Number of Measurement Points 6-6
Number of Measurement Points Description 6-6
Applying Dc Bias (Option 001 Only) 6-6
Monitoring the OSC Level or the Dc Bias Level 6-7
Performing a GO/NO-GO Test 6-8
Editing a Limit Line Table 6-8

Executing a Limit Line Test 6-10
Performing a List Sweep Measurement 6-10
Editing a Sweep List 6-10
Activating a List Sweep 6-11
Constant Current/Voltage Level Measurement 6-11
Auto Level Control Measurement for OSC Level Sweep . 6-12
Placing Characters on the Screen 6-13
Placing Letters on the Screen 6-14
Editing the Label and Changing the Position or Color . 6-14
Splitting the Measurement Display 6-15
Performing Independent Sweeps for Each Channel . . 6-15
Using the Marker 6-16
Reading a Value Using the Marker 6-16
Reading Values by Using the Sub-markers 6-16
Searching for a Specific Point 6-17
Searching for Maximum/Minimum Points 6-17
Searching for Points that Have the Target Value . . 6-17
Storing Your Trace to the Memory Traces 6-17
Storing the Data Trace to the Memory Trace 6-17
Storing More Traces to Memory Traces 6-17
Displaying Memory Traces 6-18
Displaying a Memory Trace Only When It Is Selected. 6-18
Clearing the Memory Traces 6-18
Using the Trace Math Function 6-19
Calculating Using the Data Trace and Memory Trace . 6-19
Turning Off the Data Math Function 6-19
Saving and Recalling 6-19
Saving an Analyzer Setting and Measurement Trace . 6-20
Recalling a Saved Analyzer Setting and Measurement Trace 6-20
Saving a Display Image to a TIFF File 6-20
Saving Measured Data for a Spreadsheet 6-21
Purging a File 6-21
Initializing a Disk/Memory Disk for Use 6-21
Printing 6-21
Printing a Display Image 6-21
Logging the Key Sequence into a Program 6-22
Measurement Techniques 6-23
Smoothing the Trace 6-23
Reducing Trace Noise 6-23
Increasing the Sweep Speed 6-23
When the Measurement Result Does Not Seem Correct 6-23

A. Manual Changes
Introduction A-1
Manual Changes A-1
Serial Number A-2

B. Maintenance
Performance Verification B-1
Repair B-1
Possible Problems and Their Solution B-1
Replacement of Center Conductor Collet B-2

C. Fixture Compensation Procedures for the 16191A and 16193A
16191A C-1
SHORT Compensation C-1
SHORT Compensation Key Sequence C-2
OPEN Compensation C-3
OPEN Compensation Key Sequence C-3
Connecting DUT C-4
16193A C-5
SHORT Compensation C-5
SHORT Compensation Key Sequence C-6
OPEN Compensation C-7
OPEN Compensation Key Sequence C-7
Connecting DUT C-7

D. Fixture Compensation Procedures for the 16194A
Exchanging the device holder D-1
Connecting the Test Fixture D-2
Setting D-3
SHORT compensation D-4
Short compensantion key syquence D-4
Open compensation D-5
Open compensation Key syquence D-5
Load compensation D-6
Load compensation Key sequence D-6
DUT D-7

E. Calibration and Compensation
Calibration E-1
Compensation E-1
OPEN/SHORT Fixture Compensation and Electrical Length Compensation E-1
OPEN/SHORT/LOAD Fixture Compensation E-2

Index

Figures

1-1. Manual Reference Flow 1-1
2-1. Contents 2-4
2-2. Agilent Part Numbers of Power Cables 2-6
2-3. Rack Mount Kits Installation 2-9
2-4. Connecting the Test Station to the Mainframe 2-11
2-5. Connecting the Test Head to the Test Station 2-12
2-6. Connecting a BNC Adapter 2-13
2-7. Connecting a Keyboard 2-14
3-1. Basic Flow for Impedance Measurements 3-2
3-2. Required Equipment 3-3
3-3. Calibration 3-4
3-4. 3-5
3-5. 3-5
3-6. 3-5
3-7. 3-6
3-8. 3-6
3-9. 3-6
3-10. 3-7
3-11. 3-7
3-12. 3-9
3-13. 3-9
3-14. Connecting the Test Fixtures (16192A) 3-10
3-15. Fixture Compensation 3-11
4-1. Dielectric Material Measurement 4-2
4-2. Basic Flow for Dielectric Material Measurements . . . 4-3
4-3. Required Equipment 4-4
4-4. Calibration 4-5
4-5. 4-6
4-6. 4-6
4-7. 4-6
4-8. 4-7
4-9. 4-7
4-10. 4-7
4-11. 4-8
4-12. 4-9
4-13. 4-9
4-14. Connecting the Test Fixtures 4-10
4-15. Complex Plane Annotation 4-20
5-1. Magnetic Material Measurement 5-2
5-2. Basic Flow for Magnetic Material Measurements . . . 5-3
5-3. Required Equipment 5-4
5-4. Calibration 5-5
5-5. 5-6
5-6. 5-6
5-7. 5-6
5-8. 5-7

5-9. 5-7
5-10. 5-7
5-11. 5-8
5-12. Dimensions of the MUT Holder 5-9
5-13. 5-10
5-14. 5-10
5-15. Connecting the Test Fixtures (16454A Small) 5-10
5-16. Dimensions of the MUT 5-13
6-1. Point Averaging and Sweep Averaging 6-4
6-2. Point Delay and Sweep Delay 6-5
6-3. Number of Points 6-6
6-4. Level Monitor Function 6-8
6-5. Limit Line Example 6-8
6-6. List Sweep Example 6-10
6-7. Label Function 6-13
6-8. Split Display 6-15
6-9. Uncoupled Channels 6-15
6-10. Marker List 6-16
A-1. Serial Number Plate A-2
D-1. Exchanging the Device Holder D-1
D-2. Connecting the 16194A to the Measurement Terminal . D-2
D-3. . . . . D-3
D-4. . . . . D-4
D-5. Open compensation D-5
D-6. Load compensation D-6
D-7. DUT D-7
E-1. OPEN/SHORT Fixture Compensation E-2

Tables

2-1. Contents 2-2
2-2. Fuse Selection 2-7
2-3. Rack Mount Kits 2-8
3-1. Test Fixtures Specification (1/2) 3-8
3-2. Dimension of Shorting Devices 3-12
3-3. MEASUREMENT Block Parameter Setting 3-16
3-4. STIMULUS Block Parameter Setting 3-16
3-5. MEASUREMENT Block Parameter Setting 3-17
3-6. STIMULUS Block Parameter Setting 3-17
3-7. MEASUREMENT Block Parameter Setting 3-18
3-8. STIMULUS Block Parameter Setting 3-18
3-9. MEASUREMENT Block Parameter Setting 3-19
3-10. STIMULUS Block Parameter Setting 3-19
4-1. MEASUREMENT Block Parameter Setting 4-17
4-2. STIMULUS Block Parameter Setting 4-17
4-3. MEASUREMENT Block Parameter Setting 4-19
4-4. STIMULUS Block Parameter Setting 4-19
5-1. MUT Size For Test Fixtures 5-9
5-2. MEASUREMENT Block Parameter Setting 5-15
5-3. STIMULUS Block Parameter Setting 5-15
5-4. MEASUREMENT Block Parameter Setting 5-16
5-5. STIMULUS Block Parameter Setting 5-16
5-6. MEASUREMENT Block Parameter Setting 5-17
5-7. STIMULUS Block Parameter Setting 5-17
A-1. Manual Changes by Serial Number A-1
A-2. Manual Changes by Firmware Version A-1

1

Introduction

This Quick start Guide walks you through system setup and initial power-on, shows you how to make basic measurements, and explains commonly used features. Normally, you will use this guide when you are first learning to use the 4291B RF Impedance/Material Analyzer.

Using This Manual

The organization of this Quick start Guide is described below. Figure 1-1 shows how to use the manual. Note that chapters 3, 4, and 5 are independent of each other. You need only read the chapter that pertains to your measurement (or you can read all three).

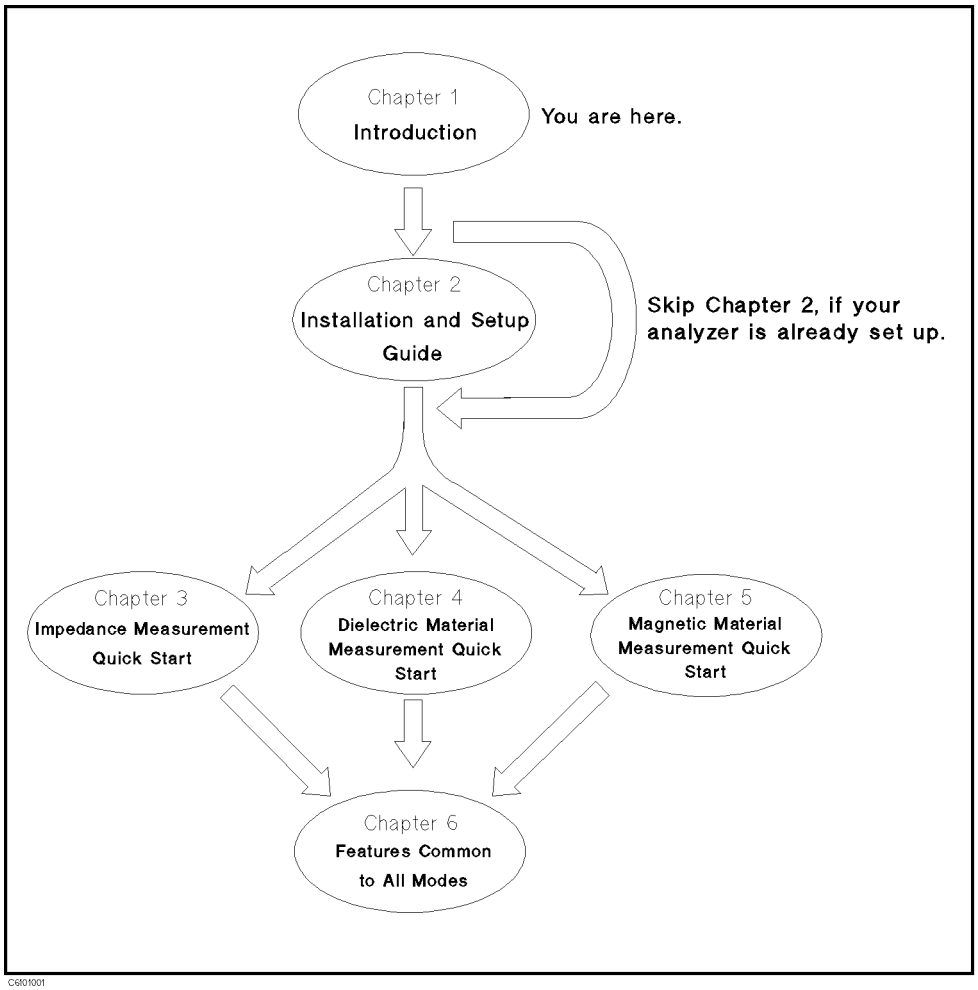

Figure 1-1. Manual Reference Flow

- Chapter 1. Introduction

This chapter provides a brief description of the 4291B and how to use this manual.

- Chapter 2. Installation and Set Up Guide

  This chapter provides the information necessary for performing an incoming inspection and setting up your analyzer. You should refer to this chapter if the analyzer has not been inspected and set up for operation.

- Chapter 3. Impedance Measurement Quick Start

  This chapter provides a quick start guide for impedance measurement.

- Chapter 4. Dielectric Material Measurement Quick Start

  This chapter provides a quick start guide for dielectric material measurement. Dielectric material measurement is available when Option 002 is installed.

- Chapter 5. Magnetic Material Measurement Quick Start

  This chapter provides a quick start guide for magnetic material measurement. Magnetic material measurement is available when Option 002 is installed.

- Chapter 6. Features Common to All Modes

  This chapter provides the procedures for the analyzer key features and measuremnent technique that can be used in all modes of operation (impedance, dielectric, and magnetic).

- Appendix A. Maintenance

  This appendix provides information on performance verification, repair, line voltage setting changes, and fuse replacement.

- Appendix B. Compensation Procedure for 16191A and 16193A

  This appendix provides the compensation procedure for the 16191A and 16193A. This appendix is referred in “5. Fixture Compensation” in Chapter 3.

- Appendix C. Calibration and Compensation

  This appendix provides the explanation of Calibration and Compensation.

Brief Description of the 4291B

For surface-mount component evaluation and material testing, the 4291B RF Impedance/Material Analyzer is an integrated package designed to provide accurate testing at higher frequencies.

For component manufacturers, RF and digital equipment designers, and material researchers, the 4291B provides these capabilities:

- Broad frequency coverage from 1 MHz to 1.8 GHz for testing RF components and materials.
- Improved measurement accuracy and repeatability over an impedance range of 0.1 Ω to 50 kΩ
- Surface-mount-device (SMD) test fixtures for different sizes of chip capacitors and inductors.
- Dielectric test fixture and built-in function for measuring permittivity, including Cole-Cole plot relaxation time (with Option 002 and 16453A).
- Magnetic test fixture and built-in function for measuring permeability of ferrite material (with Option 002 and 16454A).
- Direct impedance and material parameter measurement versus time, humidity, or temperature (with an external temperature chamber).

Additional Features

- Impedance Measurement

  Evaluate components with dc bias up to ±100 mA and ±40 V (with Option 001). (See "Applying Dc Bias (Option 001 Only)" in Chapter 6.)

  Monitor test signals applied to your DUTs. (See "Monitoring the OSC Level or the Dc Bias Level" in Chapter 6.)

  Simulate a component with equivalent circuit analysis. (See "Equivalent Circuit Analysis" in Chapter 3.)

- Others

  Store the measurement data and analyzer's settings on the DOS and LIF compatible 1.4 MB floppy disk drive and memory disk. (See "Saving and Recalling" in Chapter 6.)

  Markers and marker utilities (See "Using the Marker" in Chapter 6.)

  Limit lines for go/no-go testing (See "Performing a GO/NO-GO Test" in Chapter 6.)

  Frequency linear/log/list sweep (See "Performing a List Sweep Measurement" in Chapter 6 for list sweep.)

2

Installation and Set Up Guide

This chapter provides installation and setup instructions. It contains the following information:

- Incoming Inspection
- Power Requirements
- Replacing the Fuse
- Operation Conditions
- Ventilation Requirements
- Instruction for Cleaning
- Rack/Handle Installation
- Connecting the Test Station
- Connecting the Test Head
- Connecting a BNC Adapter
- Connecting a Keyboard

Incoming Inspection

Warning

To avoid hazardous electrical shock, do not turn on the analyzer when there are signs of shipping damage to any portion of the outer enclosure (for example, covers, panel, or display)

Inspect the shipping container for damage. If the shipping container or cushioning material is damaged, it should be kept until the contents of the shipment have been checked for completeness and the analyzer has been checked mechanically and electrically. The contents of the shipment should be as listed in Table 2-1. If the contents are incomplete, if there is mechanical damage or defect, or if the analyzer does not pass the power-on selftests, notify the nearest Agilent Technologies office. If the shipping container is damaged, or the cushioning material shows signs of unusual stress, notify the carrier as well as the Agilent Technologies office. Keep the shipping materials for the carrier's inspection.

Table 2-1. Contents

Description	Agilent Part Number
RF Impedance/Material Analyzer	4291B
Mainframe	
Test Station	
High Impedance Test Head[1]	
Documents[2]	
Operating Manual[3]	04291-90020
Quick Start Guide[3]	04291-90021
Programming Manual[3]	04291-90027
HP Instrument BASIC Users Handbook[3]	E2083-90005
Calibration Kit	
0 S Termination	04191-85302
0 Ω Termination	04191-85300
50 Ω Termination	04291-65006
LOW-LOSS Capacitor	04291-60042
Carrying Case[3]	04291-60041
Sample Program Disk	04291-18000
mini-DIN Keyboard	C3757-60401
Power Cable	See “Power Cable”
Option 012 only	
Low Impedance Test Head	
Option 013 only	
High Temperature High-impedance Test Head	
Temperature Coefficient Measurement Program Disk[4]	04291-18001
Fixture Stand[4]	04291-60121
Pad[4]	04291-09001

1 Delete when Option 011 is ordered.

2 Delete when Option 0B0 is ordered

3 This item is not shown in Figure 2-1.

4 See the temperature coefficient measurement chapter of *Operation Manual*.

Table 2-1. Contents (continued)

Description	Agilent Part Number
Option 014 only	
High Temperature Low-impedance Test Head	
Temperature Coefficient Measurement Program Disk[1]	04291-18001
Fixture Stand[1]	04291-60121
Pad[1]	04291-09001
Option 0BW only	
Service Manual[2]	04291-90111
Option 1D5 only	
BNC Adapter	1250-1859

1 See the temperature coefficient measurement chapter of *Operation Manual*.

2 This item is not shown in Figure 2-1.

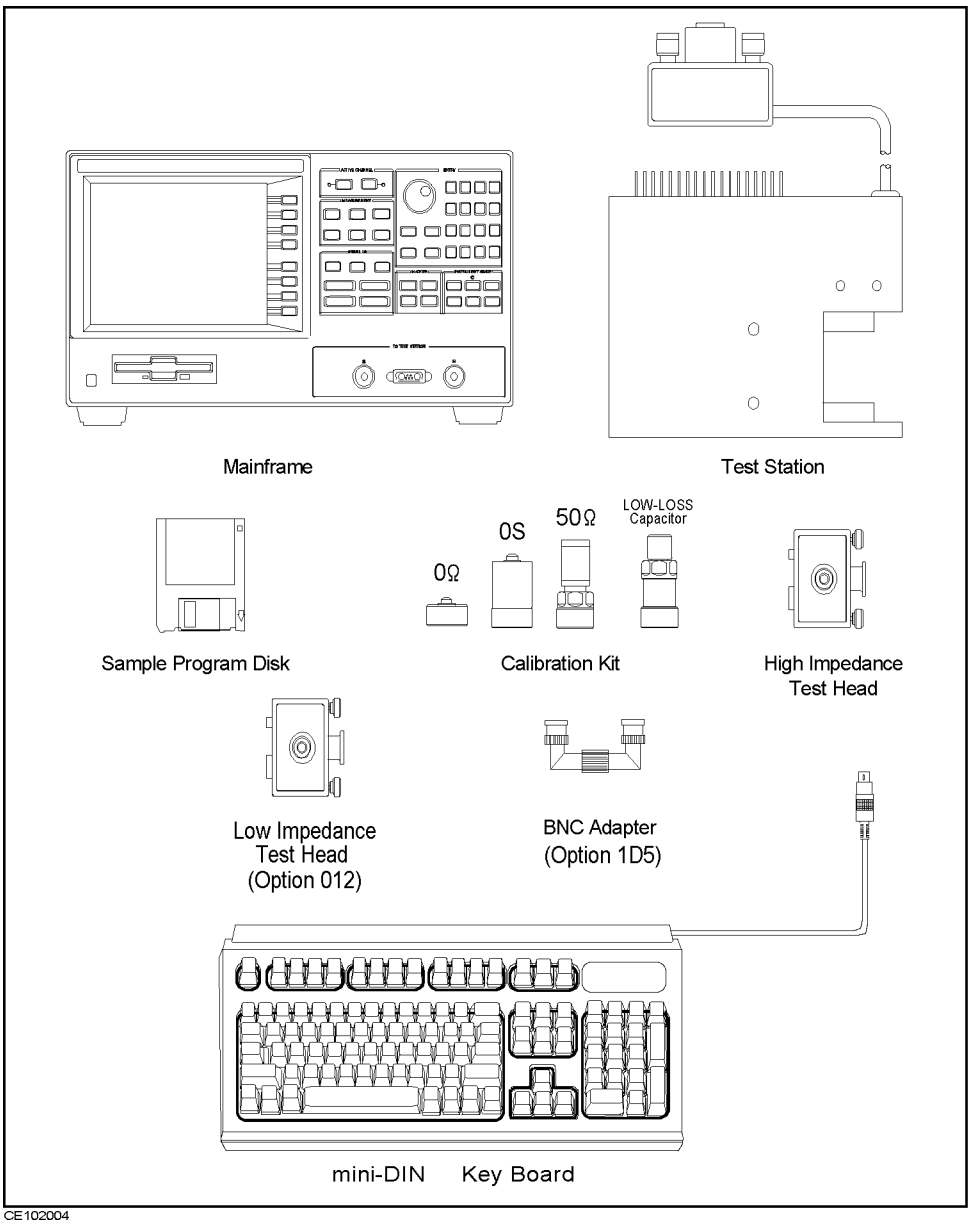

Figure 2-1. Contents

Power Requirements

The 4291B requires the following power source:

Voltage : 90 to 132 Vac, 198 to 264 Vac

Frequency : 47 to 63 Hz

Power : 300 VA maximum

Power Cable

In accordance with international safety standards, this instrument is equipped with a three-wire power cable. When connected to an appropriate ac power outlet, this cable grounds the instrument frame.
The type of power cable shipped with each instrument depends on the country of destination. Refer to Figure 2-2 for the part numbers of the power cables available.

Warning

For protection from electrical shock, the power cable ground must not be defeated.

The power plug must be plugged into an outlet that provides a protective earth ground connection.

OPTION 900

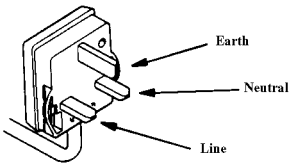

Plug : BS 1363A, 250V
Cable : 8120-1351

OPTION 901

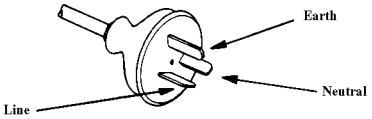

Plug : NZSS 198/AS C112, 250V
Cable : 8120-1369

OPTION 902

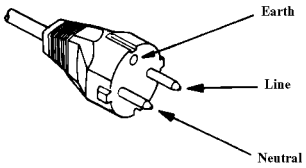

Plug : CEE-VII, 250V
Cable : 8120-1689

OPTION 903

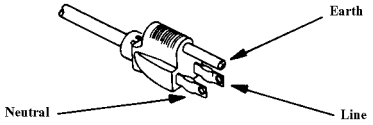

Plug : NEMA 5-15P, 125V, 15A
Cable : 8120-1378

OPTION 904

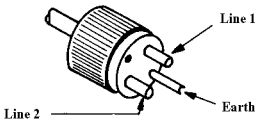

Plug : NEMA 6-15P, 250V, 15A
Cable : 8120-0698

OPTION 906

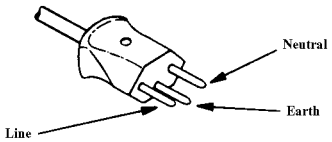

Plug : SEV 1011.1959-24507 Type 12, 250V
Cable : 8120-2104

OPTION 912

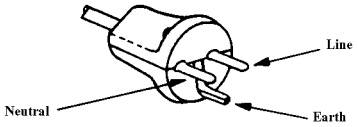

Plug : DHCR 107, 220V
Cable : 8120-2956

OPTION 917

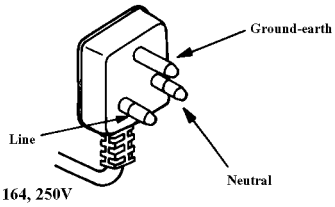

Plug : SABS 164, 250V
Cable : 8120-4211

OPTION 918

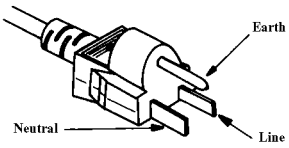

Plug : JIS C 8303, 125V, 15A
Cable : 8120-4753

OPTION 922

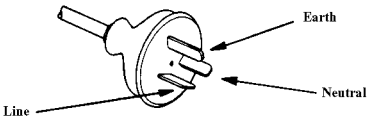

Plug : GB 1002, 250V
Cable : 8120-8376

NOTE: Each option number includes a 'family' of cords and connectors of varoius materials and plug body configurations (straight, 90° etc.).

Figure 2-2. Agilent Part Numbers of Power Cables

⚠Replacing the Fuse

Fuse Selection

Select proper fuse according to the Table 2-2.

Table 2-2. Fuse Selection

Fuse Rating/Type	Fuse Part Number
5A 250Vac UL/CSA type Time Delay	2110-0030

For ordering the fuse,contact your nearest Hewlett-Packard Sales and Service Office.

Procedure

Perform the following steps to exchange the fuse:

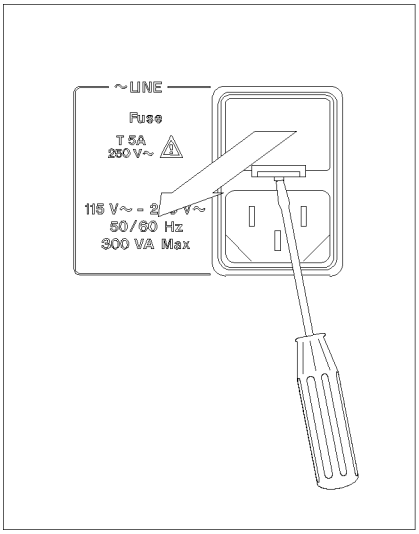

Lever a small minus screwdriver to dismount the fuse holder above the AC line receptacle on the rear panel.

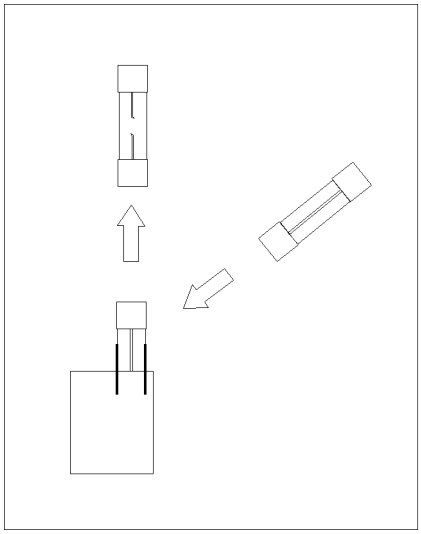

To check or replace the fuse, pull the fuse holder and remove the fuse. To reinstall the fuse, insert a fuse with the proper rating into the fuse holder.

Caution

Use the proper fuse for the line voltage selected. Use only fuses with the required current rating and of the specified type as replacements. DO NOT use a mended fuse or short-circuit the fuse-holder in order to by-pass a blown fuse. Find out what caused the fuse to blow!

Operation Conditions

The 4291B must be operated under within the following environment conditions, and sufficient space must be kept behind the 4291B to avoid obstructing the air flow of the cooling fans.

Temperature
Disk drive non-operating condition ..... 0°C to 40°C
Disk drive operating condition ..... 10°C to 40°C
Humidity
@wet bulb temperature <29°C, without condensation
Disk drive non-operating condition ..... 15 % to 95 % RH
Disk drive operating condition ..... 15 % to 80 % RH
Warm up time ..... 30 minutes

Note

The 4291B must be protected from temperature extremes which could cause condensation within the instrument.

Ventilation Requirements

To ensure adequate ventilation, make sure that there is adequate clearance of at least 180mm behind and 60mm sides.

Instruction for Cleaning

To prevent electrical shock, disconnect the 4291B power cable from the receptacle before cleaning. Wipe with a dry cloth or a soft cloth that is soaked with water and wrung tightly without undue pressure to clean the casing. Do not attempt to clean the 4291B internally.

Rack Mounting

Rack mounting information is provided with the rack mount kit. If the kit was not ordered with the analyzer as an option, it may be ordered through the nearest Agilent Technologies office. The part numbers of the rack mount kit are shown in Table 2-3.

Table 2-3. Rack Mount Kits

Option	Description	Agilent Part Number
1CN	Handle Kit	5063-9229
1CM	Rack Mount Kit	5063-9216
1CP	Rack Mount & Handle Kit	5063-9223

Rack/Handle Installation

The 4291B can be rack mounted and used as a component in a measurement system. Figure 2-3 shows how to rack mount the 4291B.

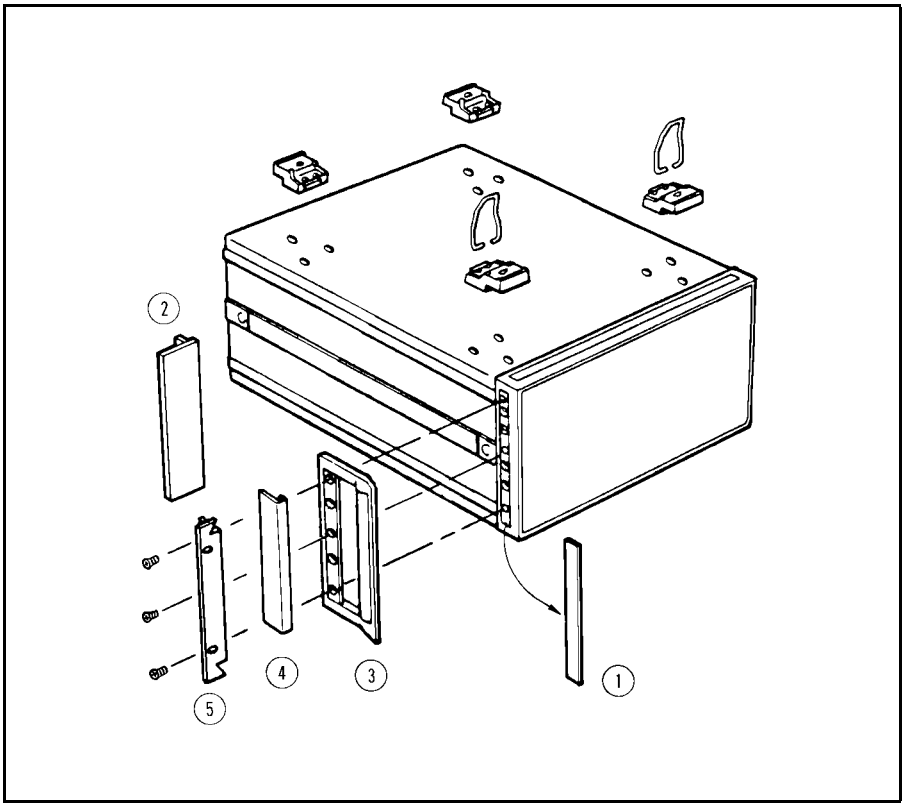

Figure 2-3. Rack Mount Kits Installation

Option 1CN Handle Kit

Option 1CN is a handle kit containing a pair of handles and the necessary hardware to attach them to the instrument.

Installing the Handle

1. Remove the adhesive-backed trim strips ① from the left and right front sides of the 4291B.
2. Attach the front handles ③ to the sides using the screws provided.
3. Attach the trim strips ④ to the handles.

Option 1CM Rack Mount Kit

Option 1CM is a rack mount kit containing a pair of flanges and the necessary hardware to mount them to the instrument in an equipment rack with 482.6 mm (19 inches) horizontal spacing.

Mounting the Rack

1. Remove the adhesive-backed trim strips ① from the left and right front sides of the 4291B.
2. Attach the rack mount flange ② to the left and right front sides of the 4291B using the screws provided.

3. Remove all four feet (lift bar on the inner side of the foot, and slide the foot toward the bar).

Option 1CP Rack Mount & Handle Kit

Option 1CP is a rack mount kit containing a pair of flanges and the necessary hardware to mount them to an instrument which has handles attached, in an equipment rack with 482.6 mm (19 inches) spacing.

Mounting the Handle and Rack

1. Remove the adhesive-backed trim strips ① from the left and right front sides of the 4291B.
2. Attach the front handle ③ and the rack mount flange ⑤ together on the left and right front sides of the 4291B using the screws provided.
3. Remove all four feet (lift bar on the inner side of the foot, and slide the foot toward the bar).

Connecting the Test Station

The 4291B consists of the mainframe, the test station, and the test head. The connection of the test station and the mainframe is shown in Figure 2-4. While you connect the test station to the mainframe, turn off the analyzer.

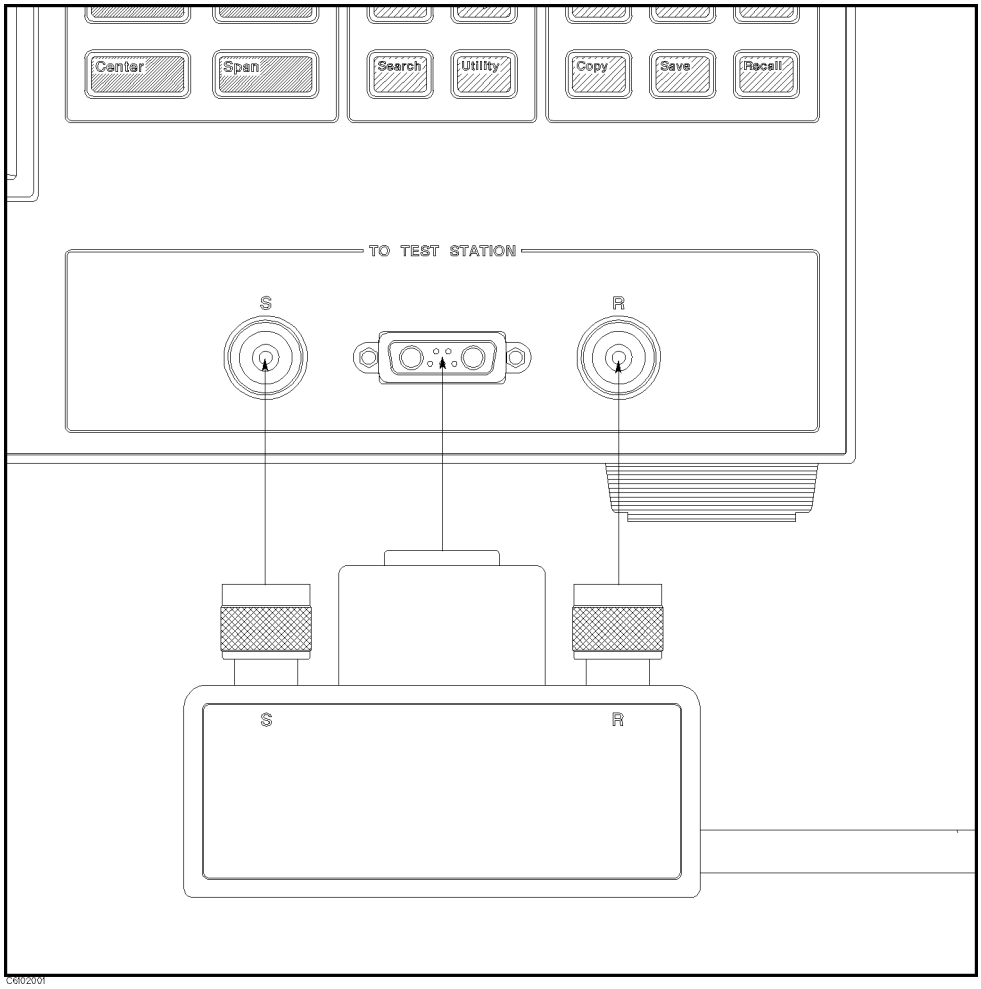

Figure 2-4. Connecting the Test Station to the Mainframe

1. Engage the two type-N connectors (labeled S and R, respectively) and the center connector.
2. Turn the two type-N connectors to tighten the connection.

Connecting the Test Head

Selecting the Test Head

Agilent Technologies provides two kinds of test heads: the High Impedance Test Head and the Low Impedance Test Head. The low impedance test head is furnished when Option 012 is ordered. An analyzer that is equipped with a high impedance test head can measure all measurement ranges. However, the measurement accuracy drops at low impedances. Usually, when the impedance of the DUT is less than approximately 10 Ω, the low impedance test head provides better measurement accuracy than the high impedance test head. For more selection information , see the chapter 12 of the *Operation Manual*.

Connecting the Test Head to the Test Station

How to connect the test head to the test station is shown in Figure 2-5. When you replace the test head, turn off the analyzer.

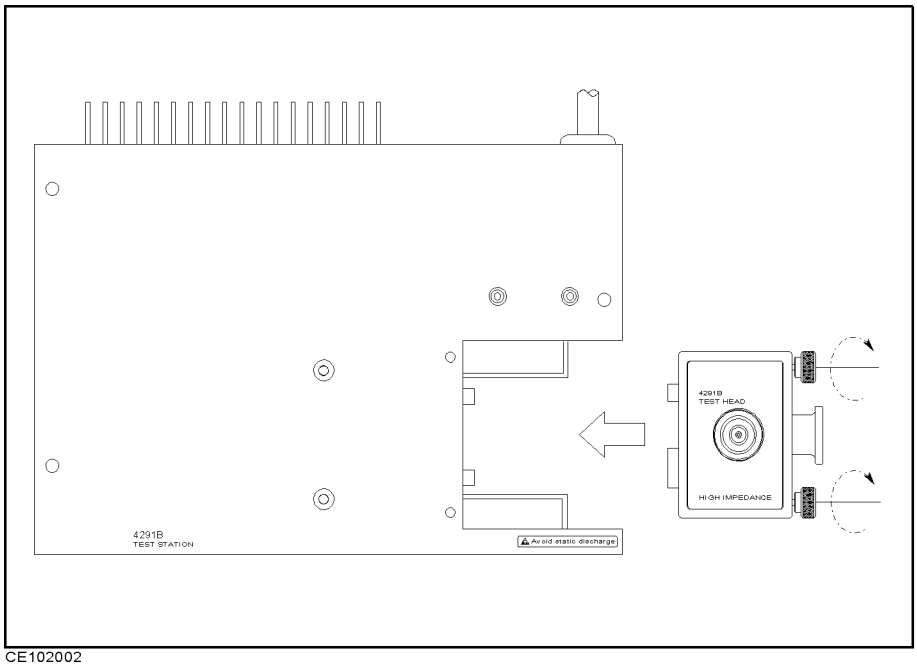

CE102002

Figure 2-5. Connecting the Test Head to the Test Station

1. Insert the test head into the test station along the guide rail.
2. Tighten the two knobs on the test head to fix the test head to the test station.

Connecting a BNC Adapter (Option 1D5 Only)

When Option 1D5 is installed, connect a BNC adapter between the REF OVEN output and the EXT REF Input on the rear panel of the analyzer. The BNC adapter is included in Option 1D5. Option 1D5 improves the frequency accuracy and stability of the analyzer.

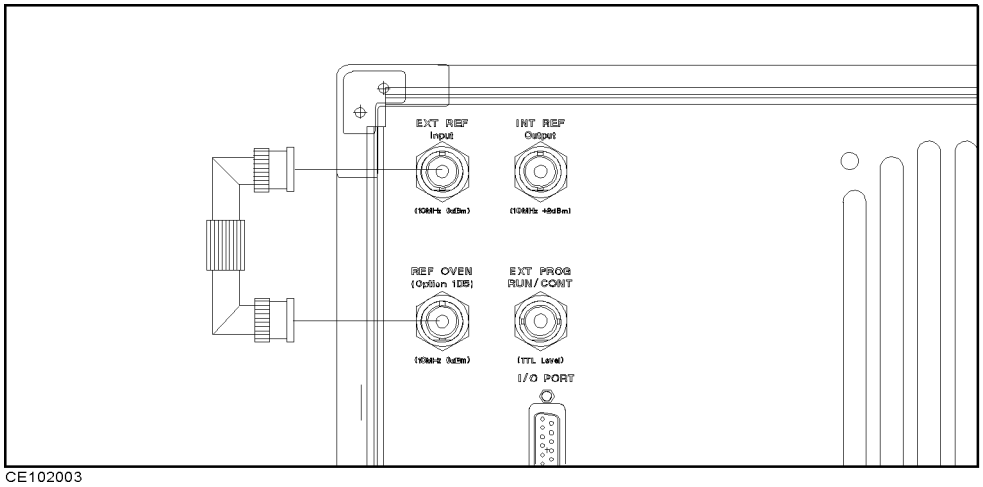

Figure 2-6. Connecting a BNC Adapter

Connecting a Keyboard

A mini-DIN keyboard can be connected to the mini-DIN connector on the rear panel of the analyzer. The mini-DIN keyboard provides an easier way to enter characters for the file names, display titles, and Instrument BASIC programs. It can also access the analyzer softkey functions by using keyboard function keys. For more information on the mini-DIN keyboard, see the *Programming Manual*.

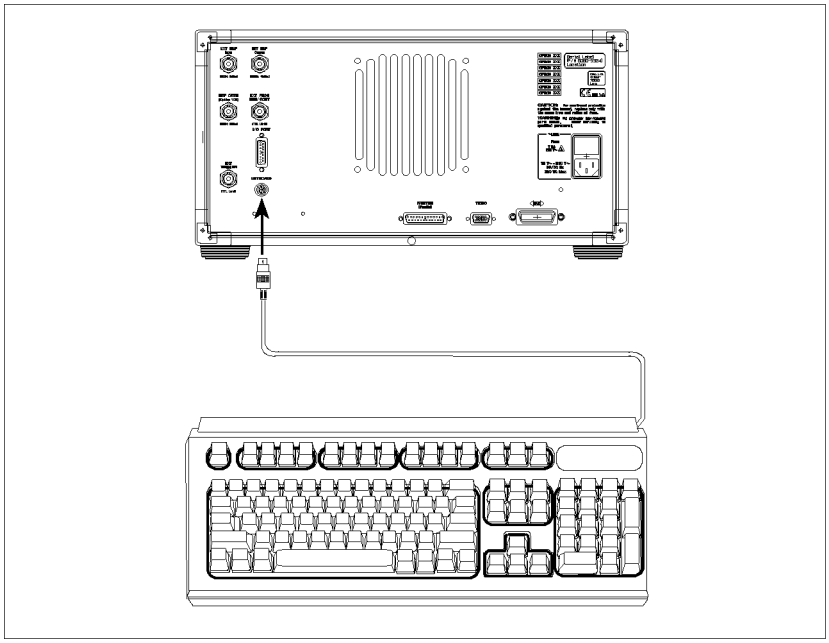

CE102010

Figure 2-7. Connecting a Keyboard

3

Impedance Measurement Quick Start

Overview

This chapter provides a quick start guide for impedance measurements. New users can quickly become familiar with the analyzer by performing these procedures. In this chapter, to help you learn how to use the analyzer, the capacitor measurements are used as examples. At the end of the quick start procedures, you will have learned how to get the following measurement results:

(1). Frequency characteristics of impedance.
(2). Frequency characteristics of capacitance and dissipation factor.
(3). OSC level characteristics of capacitance and dissipation factor.
(4). Dc bias voltage characteristics of capacitance and dissipation factor.

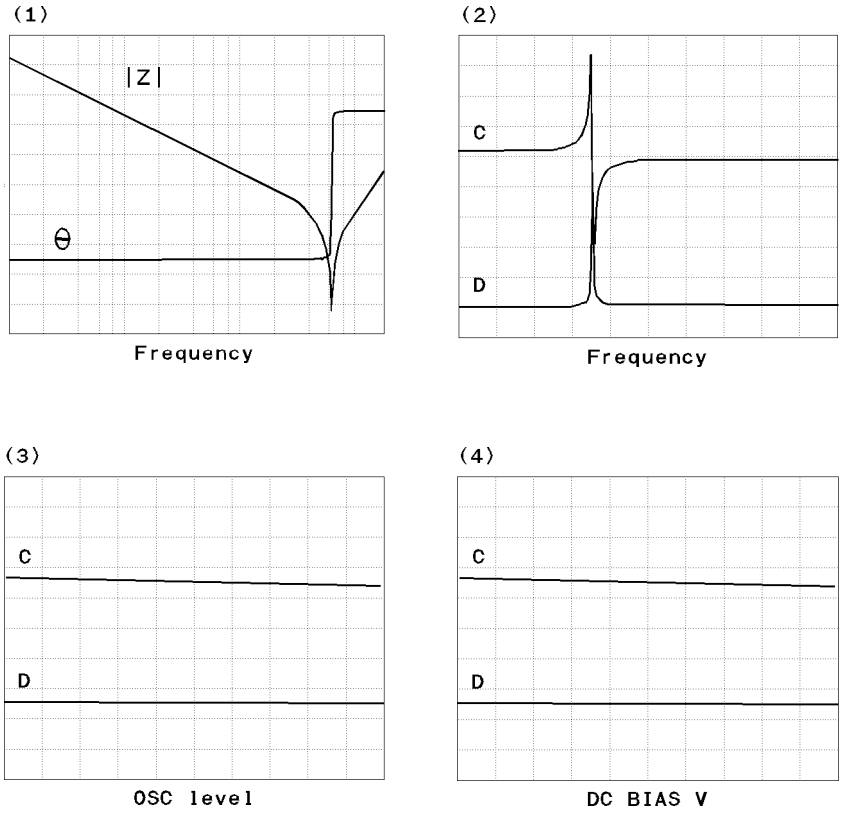

In addition, you will also learn how to do the following:

- Use the marker.
- Approximate the equivalent circuit constants with actual measurement results.

Basic Measurement Flow

Figure 3-1 shows the basic flow for an impedance measurement.

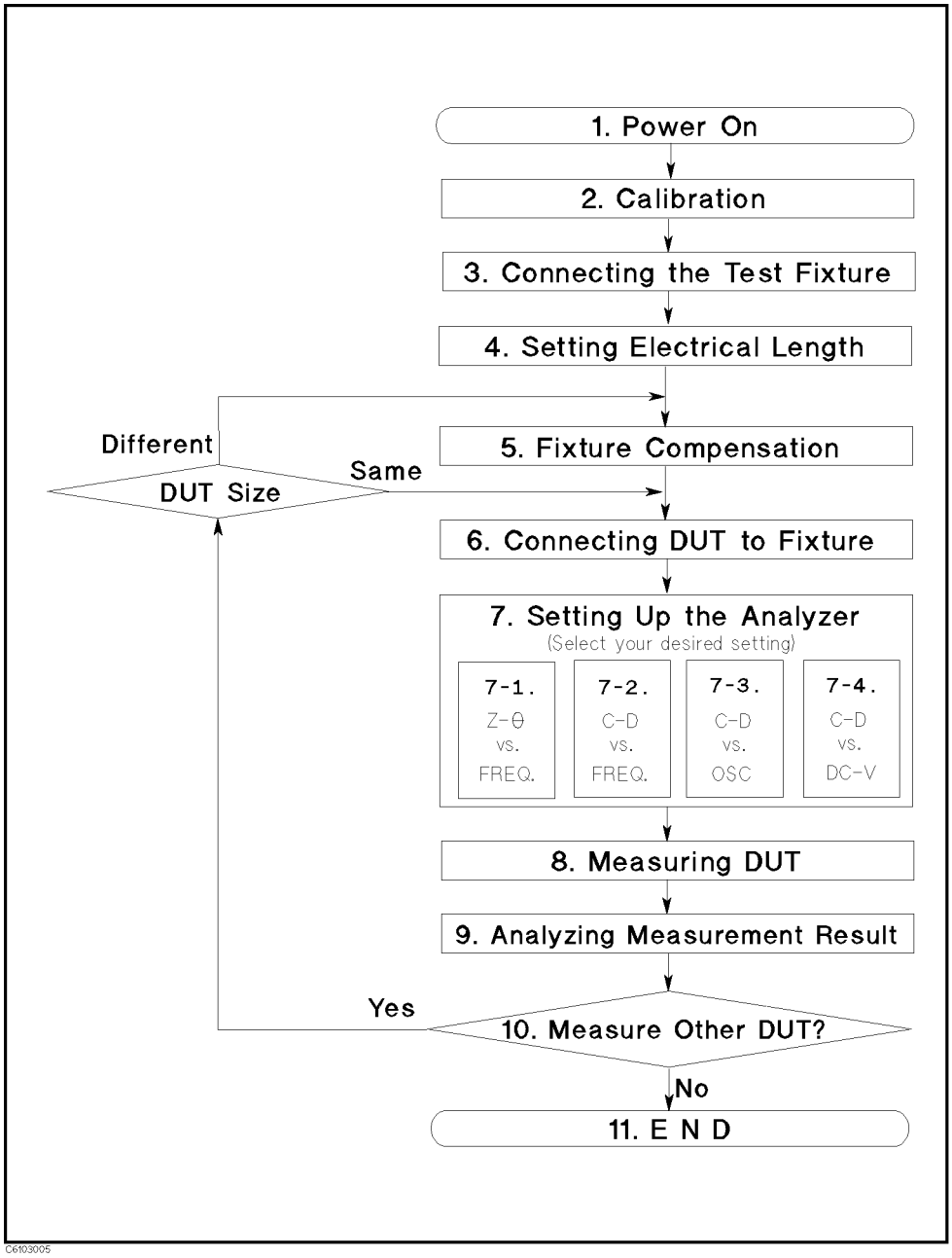

Figure 3-1. Basic Flow for Impedance Measurements

Required Equipment

To perform all the steps in this quick start, the following equipment is required:

- 4291B RF Impedance/Material Analyzer
- Test Head
  - High Impedance Test Head, or
  - Low Impedance Test Head
- Calibration Kit
- Test Fixture
  - 16191A Side Electrode SMD Test Fixture, or
  - 16192A Parallel Electrode SMD Test Fixture, or
  - 16193A Small Side Electrode SMD Test Fixture
- Shorting Device Set (Included with 16191A, 16192A, and 16193A)
- Tweezers (Included with 16191A, 16192A, and 16193A)
- Device Under Test (DUT) (A chip capacitor is demonstrated in this guide.)

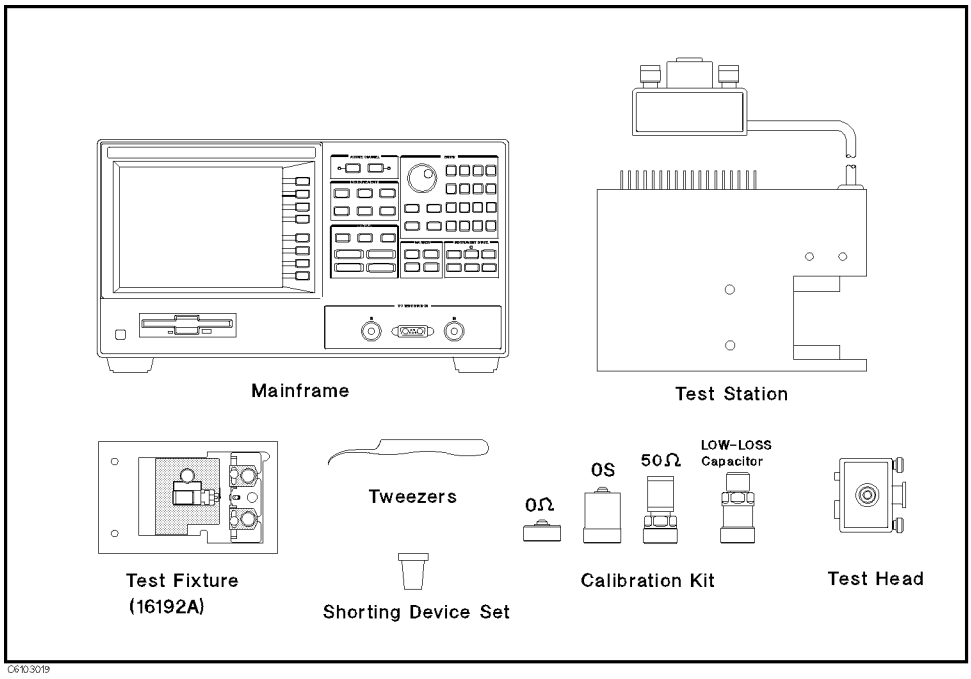

Figure 3-2. Required Equipment

1. Power ON

Verify the test station and the test head are correctly set up before you turn ON the analyzer. If necessary, see Chapter 2.

1. Press the LINE switch.
   After the power-on self-test (approximately 10 seconds), the installed options and the connected test head information are displayed.

Note

Only the option numbers for 001 and 002 are displayed at power-on (if they are installed). Other installed option numbers are listed on the rear panel.

After turning on the analyzer, a 30 minute-warm-up period is required to stabilize the instrument.

2. Calibration

Calibration defines the measurement accuracy at the APC-7® on the test head. The calibration must be performed when the analyzer is turned ON. After the calibration, the analyzer can measure within its specified measurement accuracy. The 0 S, 0 Ω, and 50 Ω terminations and low-loss capacitor in the calibration kit are required.

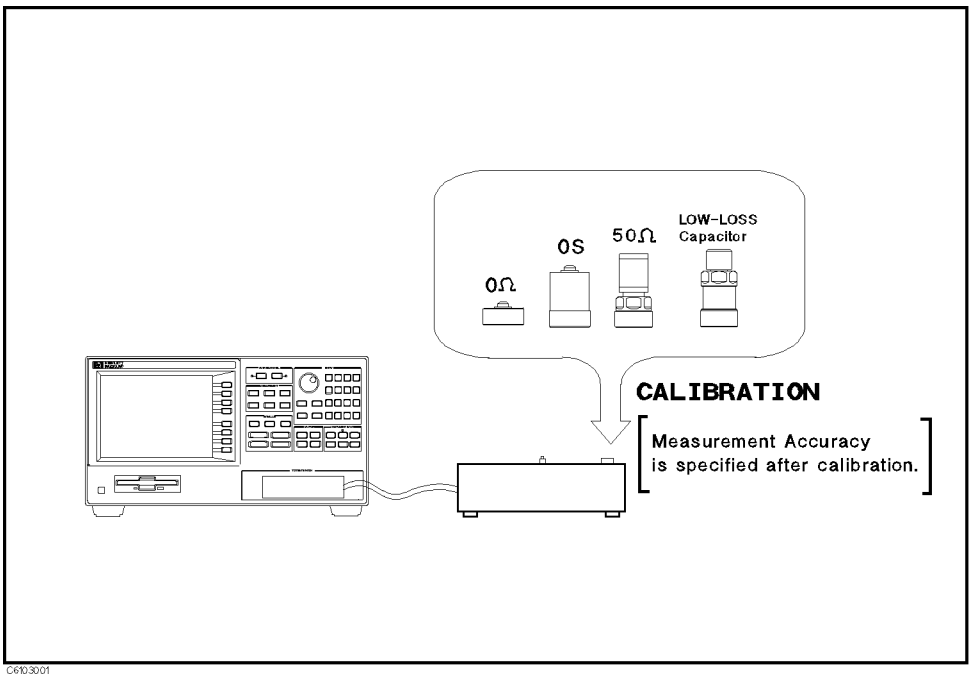

Figure 3-3. Calibration

Calibration Procedure

1. Press (Cal).
2. Press `CALIBRATE MENU`.
3. Turn the APC-7® connector on the test head as shown in Figure 3-4.
4. Verify that the connector sleeve is extended fully as shown in Figure 3-5.

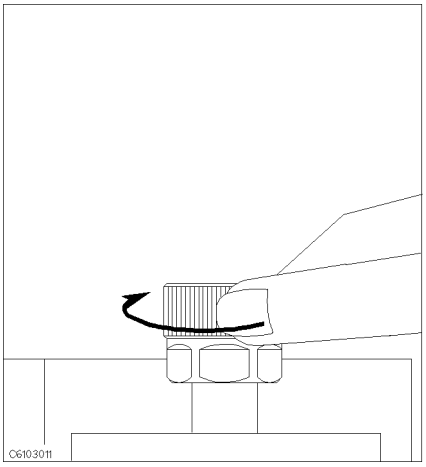

Figure 3-4.

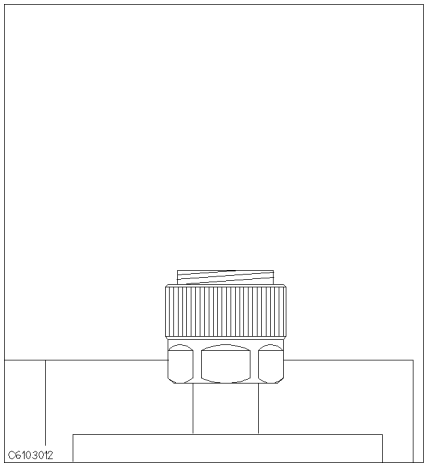

Figure 3-5.

5. Connect the 0 S termination to the APC-7® connector as shown in Figure 3-6.

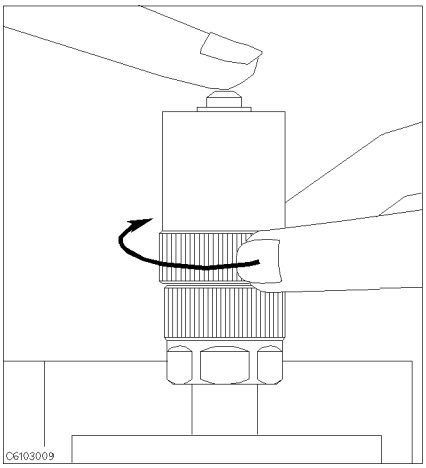

Figure 3-6.

6. Press `OPEN`.

   After an OPEN calibration sequence of about 1 minute, the `OPEN` softkey label is underlined.
7. Disconnect the 0 S termination.

8. Connect the 0 Ω termination on the APC-7® connector as shown in Figure 3-7.

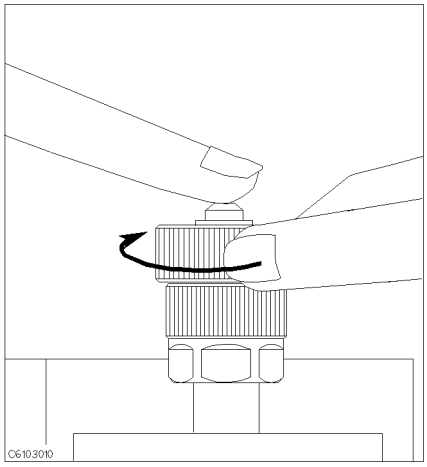

Figure 3-7.

9. Press SHORT.

   After a SHORT calibration sequence of about 1 minute, the SHORT softkey label is underlined.

10. Disconnect the 0 Ω termination.
11. Turn only the APC-7® connector nut of the 50 Ω termination as shown in Figure 3-8.
12. Verify that the connector sleeve is retracted fully as shown in Figure 3-9.

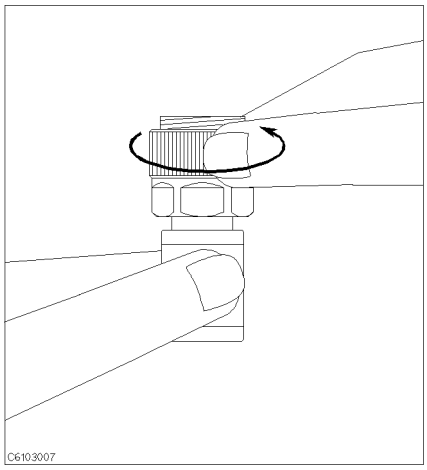

Figure 3-8.

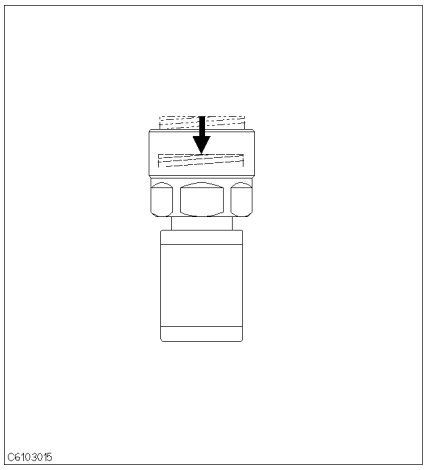

Figure 3-9.

13. Connect the 50 Ω termination on the APC-7® connector as shown in Figure 3-10.

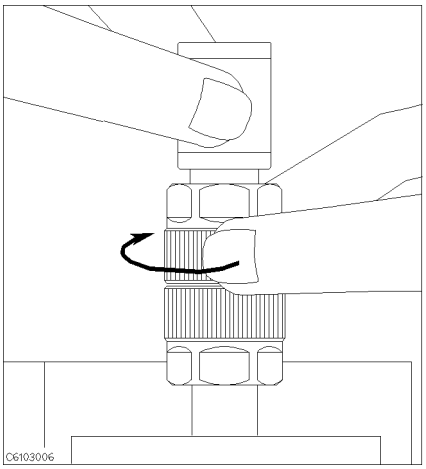

Figure 3-10.

14. Press `LOAD`.

    After a LOAD calibration sequence of about 2 minutes, the `LOAD` softkey label is underlined.

15. Disconnect the 50 Ω termination.

Note

Low-loss capacitor calibration (steps 16 through 18) is optional. The low-loss capacitor calibration allows more accurate high Q measurements. If you don't need this accuracy for high Q measurements, the low-loss capacitor calibration can be skipped.

16. Connect the low-loss capacitor to the APC-7® connector as shown in Figure 3-11.

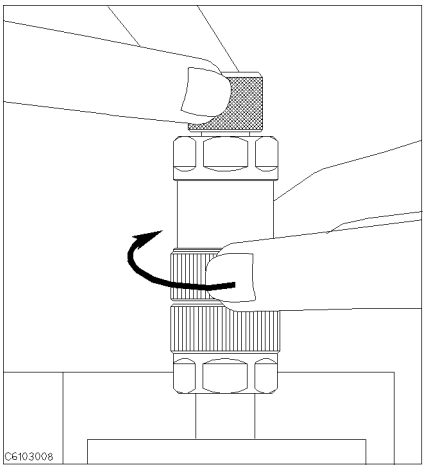

Figure 3-11.

17. Press `LOW-LOSS CAPACITOR`.

    After a low-loss capacitor calibration sequence of about 1 minute, the `LOW-LOSS CAPACITOR` softkey label is underlined.

18. Disconnect low-loss capacitor.

19. Press `DONE:CAL`.

20. Verify the two "`CO+`" notations are displayed on the left of the screen.

The calibration data is erased when the analyzer is turned off.

Note

Handling and Storage of the APC-7® Connector:

- Keep connectors clean.
- Do not touch the mating plane surfaces.
- Do not set connectors contact-end down.
- Before storing, extend the sleeve or connector nut.
- Use end caps over the mating plane surfaces.
- Never store connectors loose in a box or a drawer.

3. Connecting the Test Fixture

Selecting a Test Fixture

Agilent Technologies provides the test fixtures listed in Table 3-1 for different sizes of surface mounted device (SMD) measurements. These fixtures provide high stability and repeatability measurements.

Table 3-1. Test Fixtures Specification (1/2)

	16191A	16192A	16193A
DUT Length (mm)	2.0 to 12.0	1.0 to 20.0[1]	0.5 to 3.2
DUT Width (mm)	0.5 to 5	0.5 to 5	less than 3
DUT Height (mm)	0.5 to 5	0.5 to 5	less than 3
DUT Connection[2]	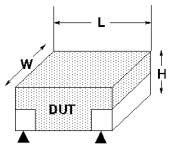	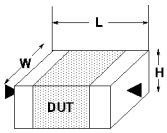	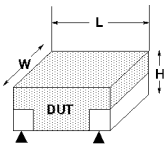

1 When you measure a DUT with a length of more than 5 mm, see chapter 2 of the *16192A Parallel Electrode SMD Test Fixture Operation and Service Manual* for the electrodes' configuration.

2 ▲ = Fixture's Electrodes

Test Fixtures Specification (2/2)

	16194A
SIZE (mm)	$2 \leq L < 15$ $a \leq 15$ $h \leq 4.5$ $D \geq 0.2$ $H \leq 5$ $0.2 \leq d$ $8 \leq W \leq 21$
DUT Connection[1]	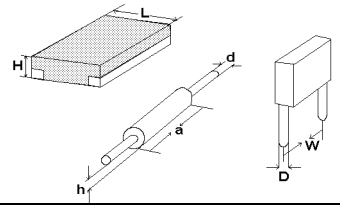

1 ▲ = Fixture's Electrodes

This Quick start Guide explains how to use these test fixtures.

Connecting the Test Fixture to the Test Head

To connect your fixture to the Test Head, perform the steps listed below. (Figure 3-14 shows the connection for 16192A as an example.)

1. Turn the APC-7® connector on the test head as shown in Figure 3-12.
2. Verify that the connector sleeve is retracted fully as shown in Figure 3-13.

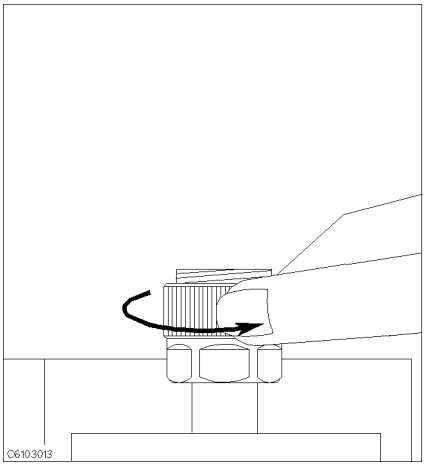

Figure 3-12.

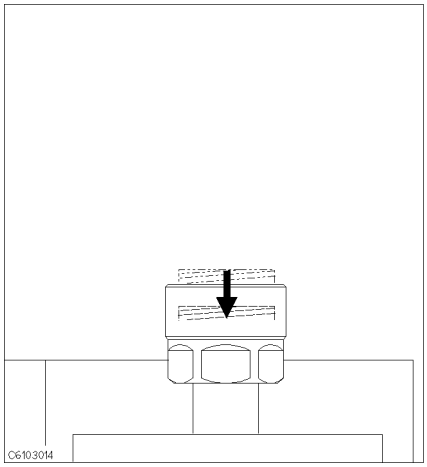

Figure 3-13.

3. Set the mounting posts of the test station into the twin locating holes at the corner of the test fixture.
4. Connect the connector on the underside of the test fixture to the APC-7 connector on the test head.

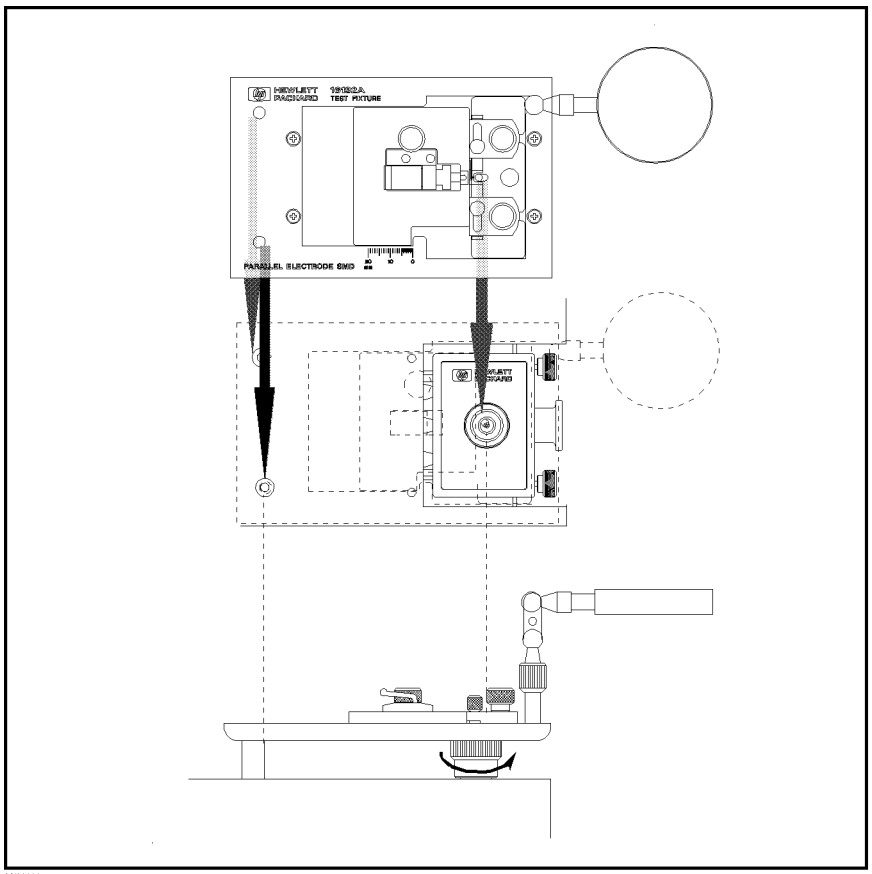

Figure 3-14. Connecting the Test Fixtures (16192A)

4. Setting the Electrical Length of the Test Fixture

In the RF region, the wavelengths are short and are not negligible compared to the physical transmission line length of the test fixture. This causes a phase shift error. The phase shift error is compensated for by the electrical length parameter for the test fixture. Because the electrical length values for the Agilent Technologies test fixtures are stored in the analyzer, you can set the electrical length parameter by selecting the fixture model number.

Note

You don't have to set an electrical length value, when you are going to do load compensation. After load compensation, you will get save results whether setting electrical length or not.

Without Option 002

1. Press (Meas).
2. Press `FIXTURE`.
3. Select the fixture model number that you are using.
4. Press `RETURN`.

5. Verify that two "Del" notations appear on the left side of the display.

With Option 002

1. Press (Meas).
2. Press FIXTURE IMPEDANCE [NONE].
3. Verify that the IMPEDANCE [NONE] softkey label is underlined.
4. Press SELECT FIXTURE
5. Select the fixture model number that you are using.
6. Press RETURN RETURN.
7. Verify that two "Del" notations appear on the left side of the display.

5. Fixture Compensation

Fixture compensation reduces the parasitic error existing between the test fixture electrode and the test head APC-7® connector (where the measurement accuracy is specified). Fixture compensation consists of OPEN, SHORT and LOAD compensations. For basic measurements, the OPEN and SHORT compensations are required.

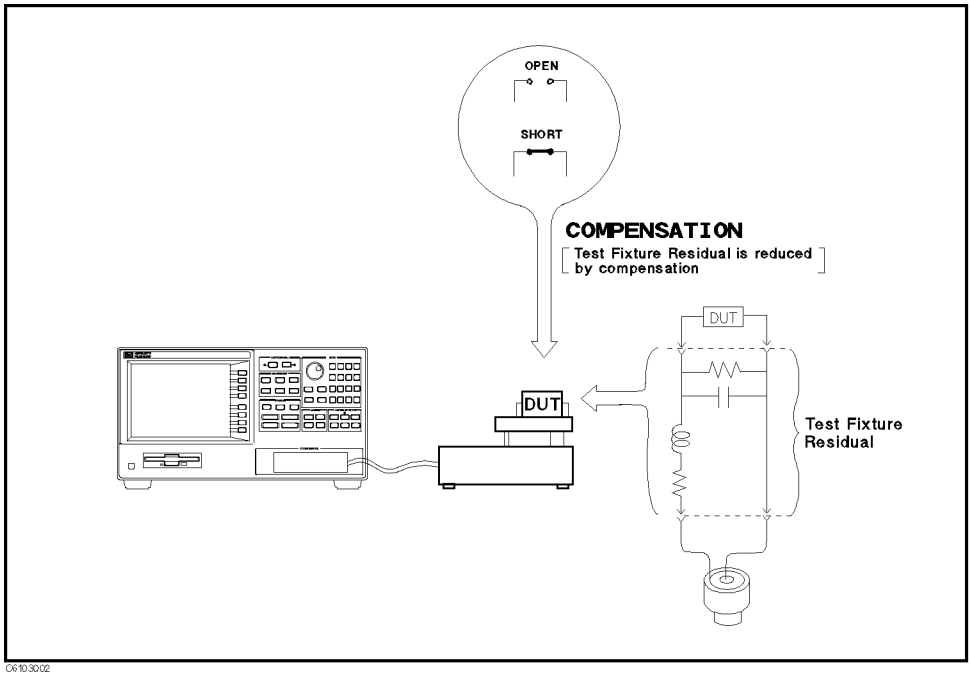

Figure 3-15. Fixture Compensation

Performing SHORT Compensation

SHORT Compensation corrects for the residual impedance due to the test fixture.

Selecting the Shorting Device

Four different-dimension shorting devices are furnished with each fixture; extra four short devices are attached for option 010. The shorting device that is closest to the size of the DUT should be used. The dimensions for each shorting device are shown in Table 3-2.

Table 3-2. Dimension of Shorting Devices

Dimension (mm)	Agilent Part Number
1 × 1 × 2.4	16191-29001
1.6 × 2.4 × 2	16191-29002
2.4 × 2.4 × 3.2	16191-29003
2.4 × 2.4 × 4.5	16191-29004
0.5 × 0.5 × 1	16191-29005[1]
0.8 × 0.8 × 1.6	16191-29006[1]
0.8 × 1.2 × 2	16191-29007[1]
0.8 × 1.6 × 3.2	16191-29008[1]

1 Extra short devices of Option 010

How to perform SHORT compensation for the 16192A is shown below as an example. The procedures for the 16191A and 16193A are shown in Appendix C.

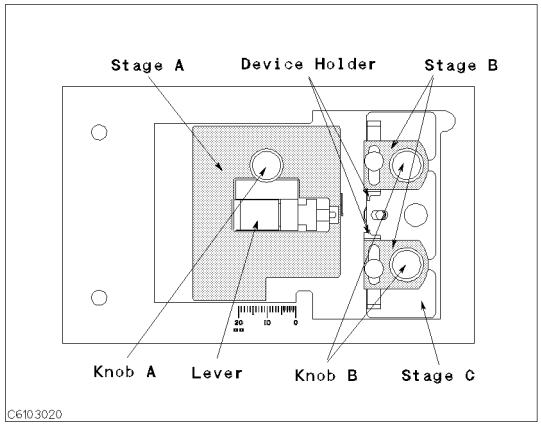

The names of each part are listed above.

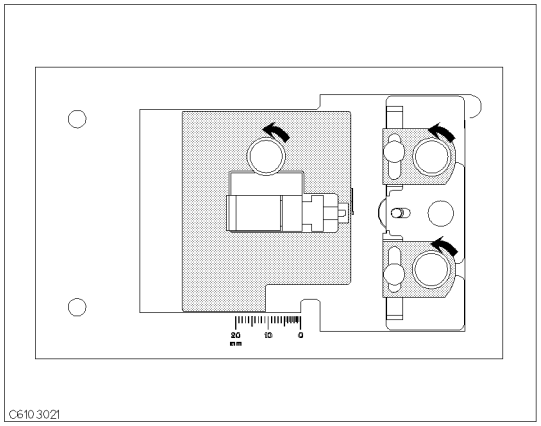

1. Loosen the three knobs.

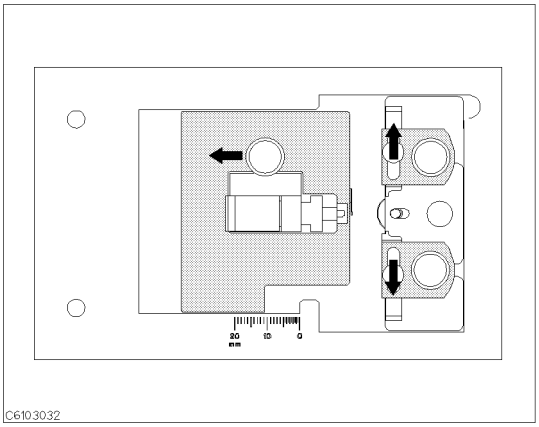

2. Move stage A and the two device holders to the outside.

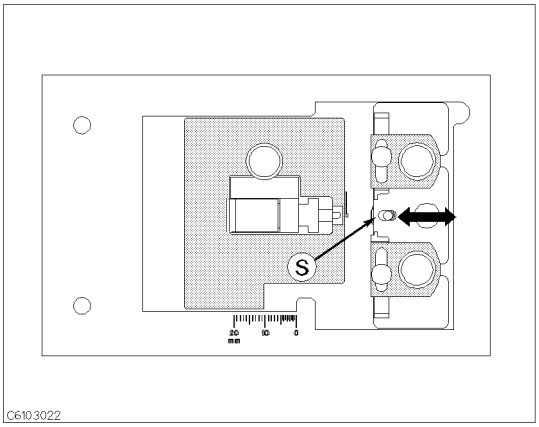

3. Adjust stage C so that the shorting device is placed on position Ⓢ.

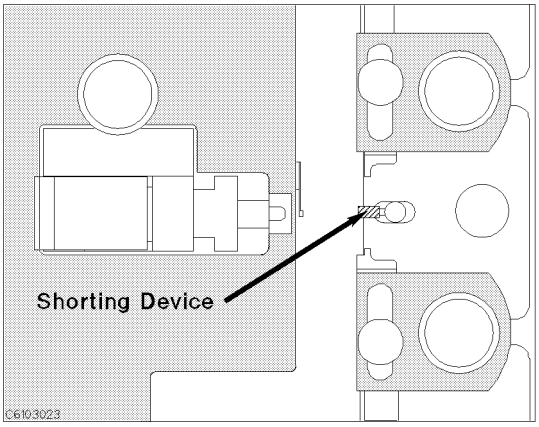

4. Place the shorting device so that it contacts the electrode.

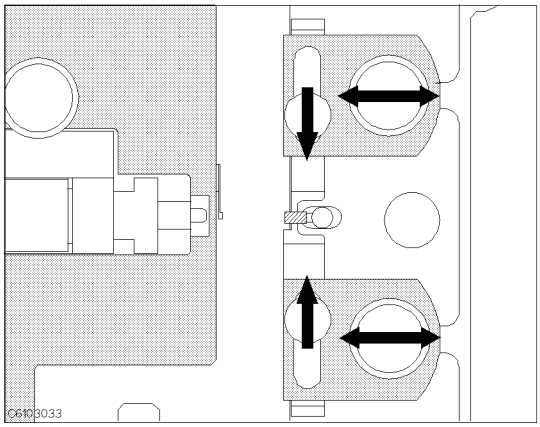

5. Adjust the two B stages and the two device holders to hold the shorting device.

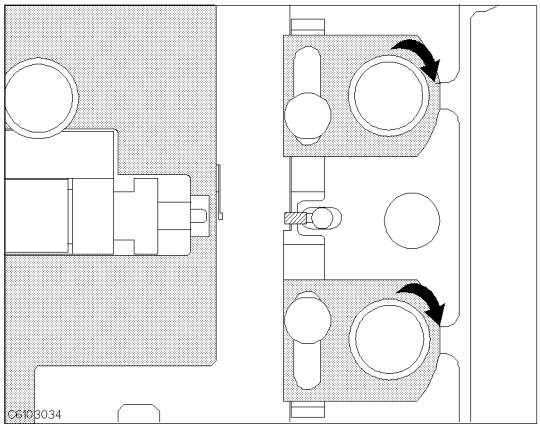

6. Tighten the two B knobs to fix the B stages and the device holders.

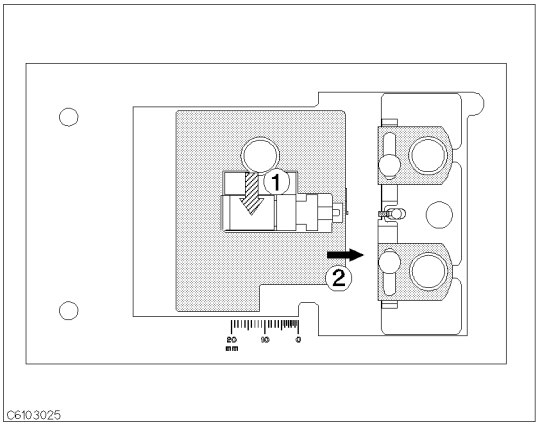

7. ① Push the lever. ② Slide stage A while pushing the lever until the electrode on the stage A slightly contacts the shorting device.

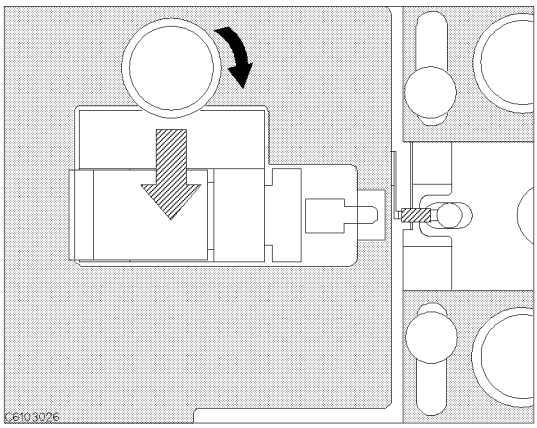

8. Tighten knob A while pushing the lever.

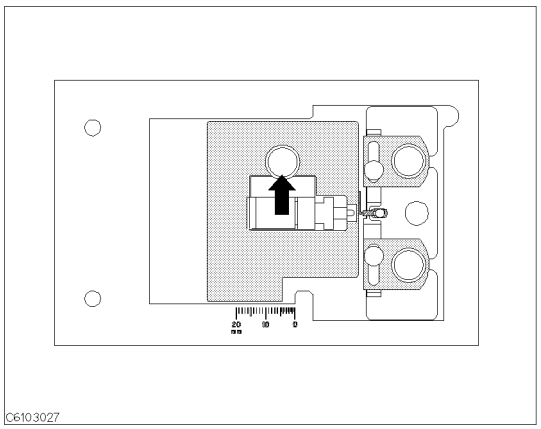

9. Release the lever to hold the shorting device.

SHORT Compensation Key Sequence

When the test fixture is ready for the SHORT compensation sequence, press the following front panel keys:

1. Press (Cal) `FIXTURE COMPEN` `COMPEN MENU` `SHORT`.

   After the SHORT compensation sequence is done, the `SHORT` softkey label is underlined.

Performing OPEN Compensation

OPEN Compensation corrects for stray admittance due to the test fixture. How to perform an OPEN compensation sequence for the 16192A is described as an example. The procedures for the 16191A and 16193A are shown in Appendix C.

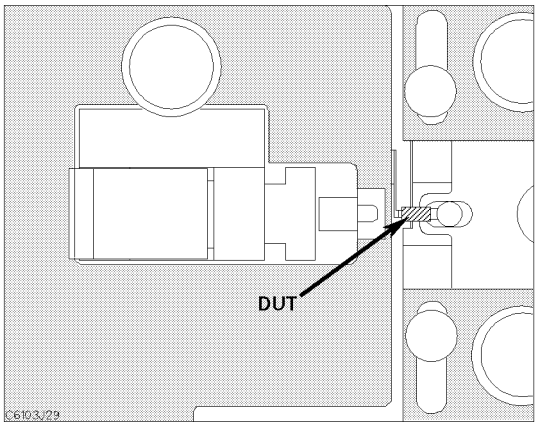

1. Set the DUT on the test fixture just as you set the shorting device in the SHORT compensation.

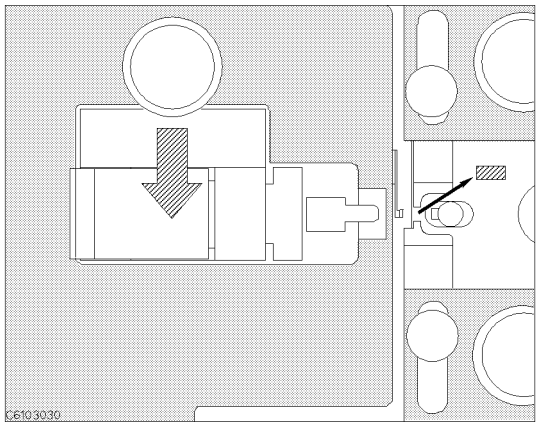

2. Push the black lever and remove the DUT.

OPEN Compensation Key Sequence

When the test fixture is ready for the OPEN compensation sequence, perform the following procedure:

1. Press `OPEN`.

   After the OPEN compensation sequence is done, the `OPEN` softkey label is underlined.

2. Press `DONE: COMPEN`.

3. Verify that two "`CMP`" notations appear on the left side of the display.

Note

You can do each compensation over again. Press (Cal) `FIXTURE COMPEN` `RESUME CAL SEQUENCE` and do compensations only you need again.

Note

- You have to set an electrical length value on 4291B before executing compensations except for load compensation.
- If you change the electrical length value, you have to retry fixture compensations except for load compensation.

6. Connecting the DUT to the Test Fixture

How to connect the DUT to the 16192A is shown in below as an example. The procedures for the 16191A and 16193A are shown in Appendix C.

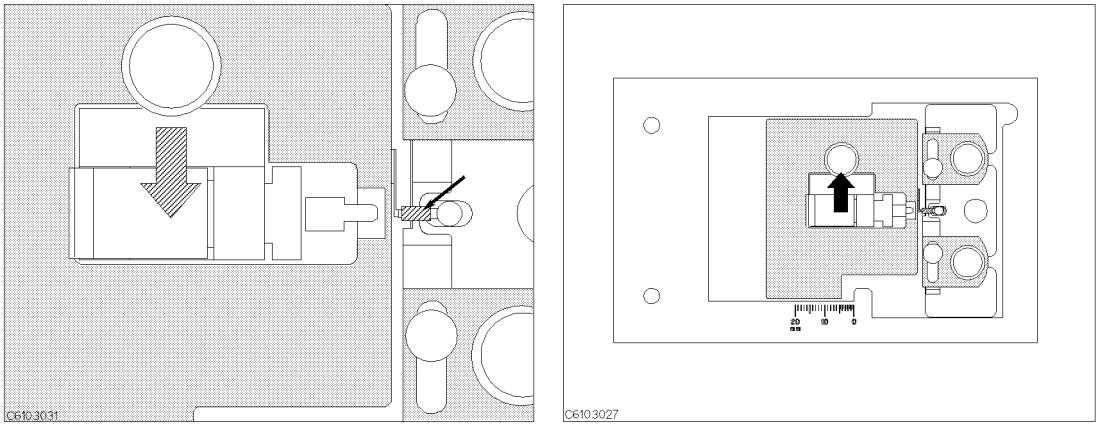

1. Push the lever and place the DUT on the electrode. 2. Release the lever to hold the DUT.

7. Setting up the Analyzer

Before you start the measurement, you must set up the analyzer to fit your measurement requirements. This section provides the set up procedures for the following measurements:

- Frequency characteristics of |Z|-θ
- Frequency characteristics of C-D
- OSC level characteristics of C-D
- dc bias voltage characteristics of C-D

The set up procedure for each measurement is described in the following pages. Set up your analyzer according the applicable procedure.

7-1. Setting up for |Z|-θ vs. Frequency

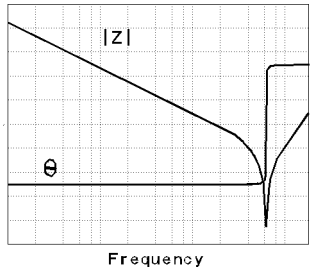

The example setup for this measurement is as follows.

Table 3-3. MEASUREMENT Block Parameter Setting

	Channel 1 Setting	Channel 2 Setting
Parameter	Z	θ
Format	Log	Linear

Table 3-4. STIMULUS Block Parameter Setting

Sweep Parameter	Frequency
Sweep Type	Log
Frequency Range	1 MHz to 1.8 GHz
OSC Level	500 mV

To set up the analyzer, press the front panel keys as shown in the following procedure:

- MEASUREMENT Block

1. (Meas) (Chan 1) IMPEDACE: MAG (|Z|) (Ch1 Parameter = |Z|)
2. (Meas) (Chan 2) PHASE: (θz) (Ch2 Parameter = θ)
3. (Format) (Chan 1) LOG Y-AXIS (Ch1 Format = Log)
4. (Format) (Chan 2) LIN Y-AXIS (Ch2 Format = Linear)

- STIMULUS Block

5. (Sweep) SWEEP MENU SWP SRC: FREQ (Sweep = Frequency)
6. (Sweep) SWEEP MENU LOG (Sweep Type = Log)
7. (Start) (1) (M/μ) (Start = 1 MHz)
8. (Stop) (1) (.) (8) (G/n) (Stop = 1.8 GHz)
9. (Source) OSC LEVEL (0) (.) (5) (x1) (OSC Level = 500 mV)

If you want to apply dc bias, refer to “Applying Dc Bias (Option 001 Only)” in Chapter 6.

Jump to “Display Annotations”

7-2. Setting up for C - D vs. Frequency

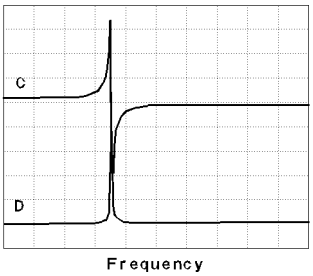

The example setup for this measurement is as follows.

Table 3-5. MEASUREMENT Block Parameter Setting

	Channel 1 Setting	Channel 2 Setting
Parameter	Cp[1]	D
Format	Linear	Linear

1 The selection of parallel (Cp) or series (Cs) depends on the DUT impedance, see the impedance measurement basics chapter in the *Operation Manual* .

Table 3-6. STIMULUS Block Parameter Setting

Sweep Parameter	Frequency
Sweep Type	Linear
Frequency Range	100 MHz to 1.1 GHz
OSC Level	500 mV

To set up the analyzer, press the front panel keys as shown in the following procedure:

- MEASUREMENT Block
  1. (Meas) (Chan 1) `CAPACITNCE: PRL (Cp)` (Ch1 Parameter = Cp)
  2. (Meas) (Chan 2) `D FACTOR: (D)` (Ch2 Parameter = D)
  3. (Format) (Chan 1) `LIN Y-AXIS` (Ch1 Format = Linear)
  4. (Format) (Chan 2) `LIN Y-AXIS` (Ch2 Format = Linear)
- STIMULUS Block
  5. (Sweep) `SWEEP MENU` `SWP SRC: FREQ` (Sweep = Frequency)
  6. (Sweep) `SWEEP MENU` `SWP TYPE: LIN` (Sweep Type = Linear)
  7. (Start) (1) (0) (0) (M/μ) (Start = 100 MHz)
  8. (Stop) (1) (.) (1) (G/n) (Stop = 1.1 GHz)
  9. (Source) `OSC LEVEL` (0) (.) (5) (x1) (OSC Level = 500 mV)

If you want to apply dc bias, refer to “Applying Dc Bias (Option 001 Only)” in Chapter 6.

Jump to “Display Annotations”

7-3. Setting up for C - D vs. OSC Level

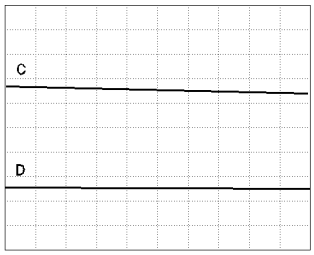

The example setup for this measurement is as follows.

Table 3-7. MEASUREMENT Block Parameter Setting

	Channel 1 Setting	Channel 2 Setting
Parameter	Cp[1]	D
Format	Linear	Linear

1 The selection of parallel (Cp) or series (Cs) depends on the DUT impedance, see the impedance measurement basics chapter in the *Operation Manual* .

Table 3-8. STIMULUS Block Parameter Setting

Sweep Parameter	OSC Level
Sweep Type	Linear
OSC Level Range	300 mV to 500 mV
Source Frequency	100 MHz

To set up the analyzer, press the front panel keys as shown in the following procedure:

- MEASUREMENT Block

1. (Meas) (Chan 1) CAPACITNCE: PRL (Cp) (Ch1 Parameter = Cp)
2. (Meas) (Chan 2) D FACTOR: (D) (Ch2 Parameter = D)
3. (Format) (Chan 1) LIN Y-AXIS (Ch1 Format = Linear)
4. (Format) (Chan 2) LIN Y-AXIS (Ch2 Format = Linear)

- STIMULUS Block

5. (Sweep) SWEEP MENU OSC LEVEL (Sweep = OSC Level)
6. (Sweep) SWEEP MENU SWP TYPE: LIN (Sweep Type = Linear)
7. (Start) (0) (.) (3) (x1) (Start = 300 mV)
8. (Stop) (0) (.) (5) (x1) (Stop = 500 mV)
9. (Source) CW FREQ (1) (0) (0) (M/μ) (CW Freq. = 100 MHz)

If you want to apply dc bias, refer to “Applying Dc Bias (Option 001 Only)” in Chapter 6.

Jump to “Display Annotations”

7-4. Setting up for C - D vs. dc-V (Option 001 only)

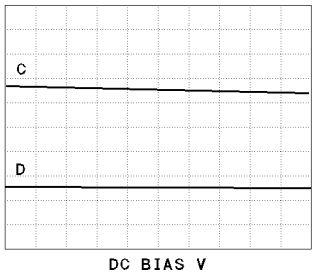

The example setup for this measurement is as follows.

Table 3-9. MEASUREMENT Block Parameter Setting

	Channel 1 Setting	Channel 2 Setting
Parameter	Cp[1]	D
Format	Linear	Linear

1 The selection of parallel (Cp) or series (Cs) depends on the DUT impedance, see the impedance measurement basics chapter in the *Operation Manual* .

Table 3-10. STIMULUS Block Parameter Setting

Sweep Parameter	dc-V
Sweep Type	Linear
DC Bias Range	0 V to 5 V
OSC Level	300 mV
Source Frequency	100 MHz

To set up the analyzer, press the front panel keys as shown in the following procedure:

- MEASUREMENT Block

1. (Meas) (Chan 1) `CAPACITNCE: PRL (Cp)` (Ch1 Parameter = Cp)
2. (Meas) (Chan 2) `D FACTOR: (D)` (Ch2 Parameter = D)
3. (Format) (Chan 1) `LIN Y-AXIS` (Ch1 Format = Linear)
4. (Format) (Chan 2) `LIN Y-AXIS` (Ch2 Format = Linear)

- STIMULUS Block

5. (Sweep) `SWEEP MENU` `DC BIAS V` (Sweep = Dc Bias V)
6. (Sweep) `SWEEP MENU` `SWP TYPE: LIN` (Sweep Type = Linear)
7. (Start) (0) (x1) (Start = 0 V)
8. (Stop) (5) (x1) (Stop = 5 V)
9. (Source) `OSC LEVEL` (0) (.) (3) (x1) (OSC Level = 300 mV)
10. (Source) `CW FREQ` (1) (0) (0) (M/μ) (CW Freq. = 100 MHz)
11. (Source) `DC BIAS on OFF` (Turn ON dc bias)

Note

When you measure an inductor, the dc bias current characteristics are usually measured. In that case, select (Sweep) `SWEEP MENU` `DC BIAS I` for dc bias current sweep.

Display Annotations

The settings that you set in the previous section are displayed on the LCD as annotations. The annotations are described below. Verify that they are set correctly.

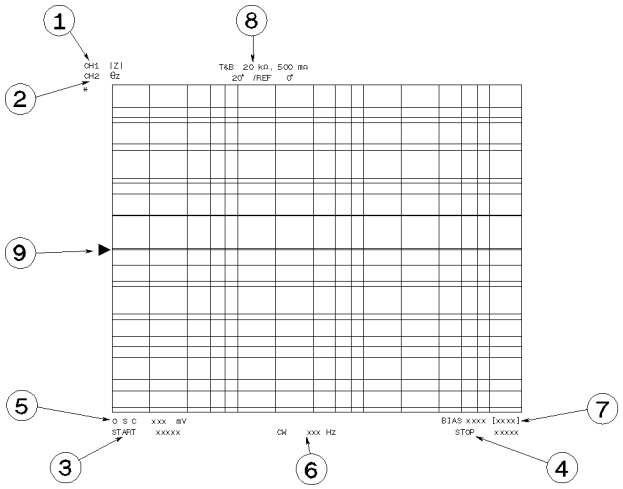

① measurement parameter for channel 1
② measurement parameter for channel 2
③ stimulus start value
④ stimulus stop value
⑤ OSC Level value (frequency, dc bias sweep only)
⑥ CW frequency (OSC level, dc bias sweep only)
⑦ dc bias value (option 001 only)
⑧ grid scale (you do not have set the scale in the previous section).

- `T&B x, y` (for log, linear format)
  The value of the top of grid is `x`.
  The value of the bottom of grid is `y`.
- `z / REF xx` (for linear format)
  The scale/div value is `z`.
  The value of the reference position at which the ▸ ⑨ locates is `xx`.

Note

The analyzer has two channels that provide independent measurement and display of the data. The traces and grids of the two channels are displayed, one over the other. The (Chan 1) and (Chan 2) keys (in the ACTIVE CHANNEL block) select which channel is activated. All the channel specific functions that are selected apply to the active channel. When you want to display the trace of either channel 1 or 2, toggle `DUAL CHAN ON off` to `on OFF` under (Display), and then select (Chan 1) or (Chan 2)

8. Measuring the DUT

After you place the DUT on the test fixture, the measured result is displayed.

Performing Automatic Scaling

Often, the trace obtained after specifying the frequency range is too large or too small vertically for the grid. However, by using the automatic scaling function, you can obtain the optimum vertical setting.

1. Press (Chan 1) to activate channel 1.
2. Press (Scale Ref).
3. Press AUTO SCALE to scale the trace of channel 1.
4. Press (Chan 2) to activate channel 2.
5. Press AUTO SCALE to scale the trace of channel 2.

If you want to change scale, press (Scale Ref) SCALE/DIV and turm the rotary knob or input scale value as required.

You will get the measurement results shown on the first page of this chapter.

9. Analyzing a Measurement Result

If you can obtain the correct trace on the display, you can analyze a measurement result by using the marker and the equivalent circuit analysis function.

Using the Marker

Marker functions allow you to read out the trace values and the frequency, and also to move to a specific point (for example, the maximum, the minimum, or the peak point). In this procedure, reading a measured value and moving the marker to the minimum point is demonstrated.

Reading a Measured Value

1. Press (Marker).
2. Turn the rotary knob until the marker moves to the point where you want to read the measured value.
3. Read the marker value displayed on the upper right of the display.

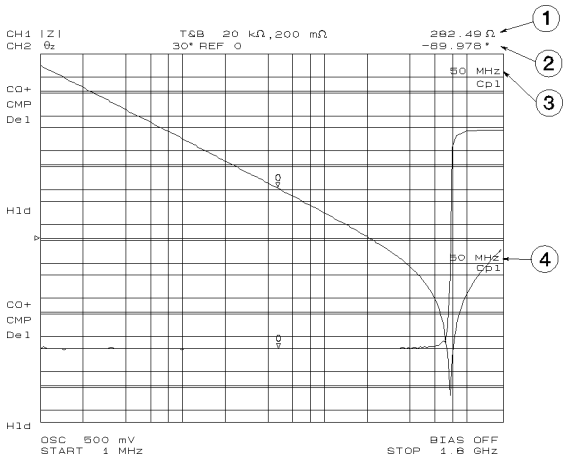

① Marker value for channel 1
② Marker value for channel 2
③ Marker stimulus for channel 1
④ Marker stimulus for channel 2

Note

When the markers are uncoupled by pressing (Marker), `MKR [COUPLED]` to `[UNCOUPLED]`, each marker stimulus is controlled independently.

Moving the Marker to the Minimum Point

1. Press (Chan 1).
2. Press (Search).
3. Press `SEARCH: MIN`
4. The active marker moves to the minimum point on the trace of channel 1
5. Read the marker value displayed on the upper right of the display.

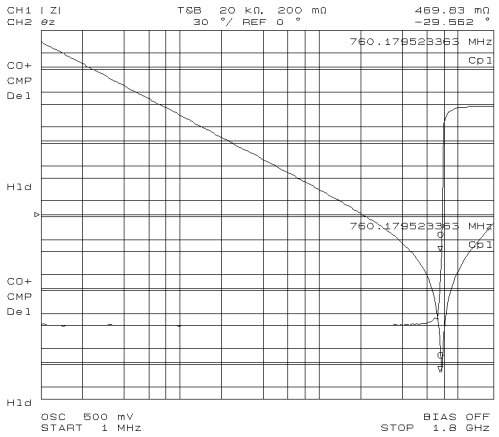

Clearing the Marker

1. Press (Marker).
2. Press PRESET MKRS
3. The marker is cleared.

Equivalent Circuit Analysis

This analyzer has a function that can approximate the equivalent circuit constants of the five different circuit models with actual data. This function can also simulate the frequency characteristics of a component by specifying the equivalent circuit constants of the selected circuit model. In this procedure, an analysis for a 10 pF capacitor is demonstrated.

Note

The equivalent circuit analysis is available when the sweep parameter is frequency.

Approximation

1. Press (Display).
2. Press EQUIV CKT MENU.
3. Press SELECT CKT.
4. Select D for a capacitor.

Equivalent Circuit Model Selection

Model Type	Type of DUTs[1]
A	Coils with high core loss
B	Coils in general / Resistors
C	High-value resistors
D	Capacitors
E	Resonators

1 See the *Operation Manual* for more information

5. Press CALCULATE EQV PARAM
6. The approximated constants are displayed on the bottom of the screen.

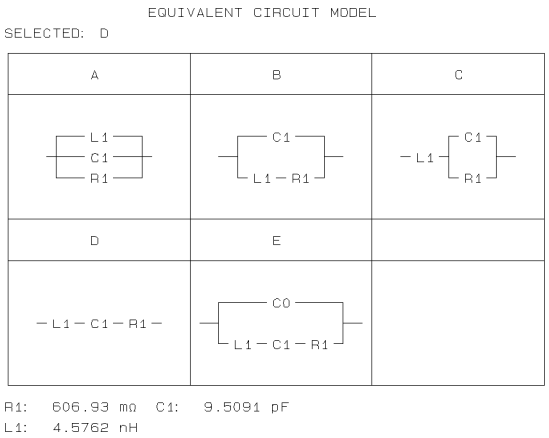

Simulation

The frequency characteristics are simulated by using the data approximated by the calculation described in a previous procedure.

1. Press (Display).
2. Press `EQUIV CKT MENU`.
3. Press `SIMULATE F-CHRST`.
4. The frequency characteristics are simulated and the simulated data is traced on the screen

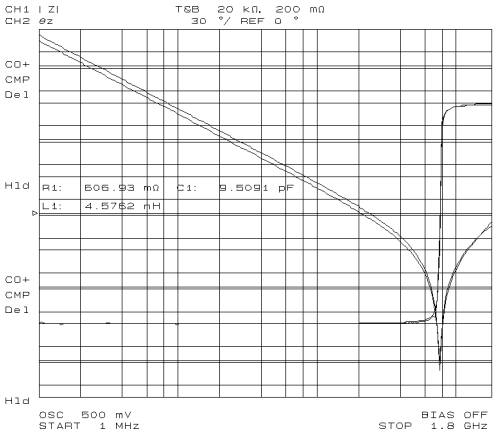

Clearing the Approximated Constant Data

1. Press (Display).
2. Press `EQIV CKT MENU`.
3. Toggle the `EQIV CKT PARM [ON]` to `[OFF]`.
4. The approximated constant data is cleared.

Clearing the Simulated Data

The simulated data is stored into the memory trace. Clear the memory trace to erase the simulated data trace.

1. Press (Display).
2. Press DEFINE TRACE.
3. Press CLEAR MEMORIES.
4. The simulated data traces are cleared.

10. Measuring Other DUT

If you want to measure other DUTs on different setups, start from "6. Connecting the DUT to the Test Fixture". If the next DUT is a different size, start from "5. Fixture Compensation".

For More Information

Chapter 6 provides procedures for the analyzer's key features and measurement technique (for example, averaging, monitoring level, saving/recalling, and printing).

4

Dielectric Material Measurement Quick Start

Overview

This chapter provides a quick start guide for dielectric material measurements. New users can quickly become familiar with the analyzer by performing these procedures. At the end of the quick start procedures, you will have learned how to make the following measurements:

(1). Frequency characteristics of relative permittivity.
(2). Cole-Cole plot.

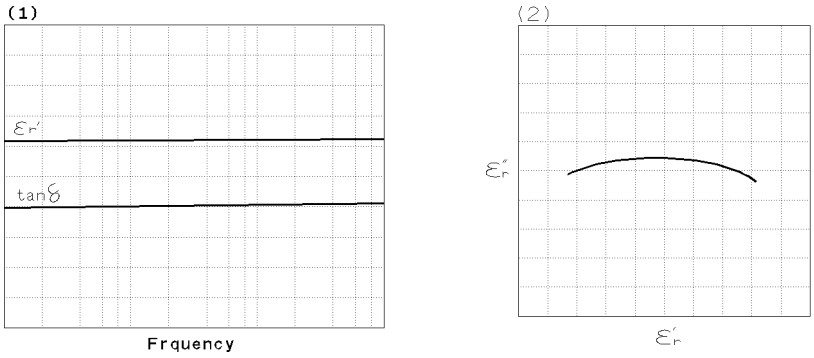

The analyzer displays relative permittivity in a complex format. The real part (ε_r') represents the energy storage and the imaginary part (ε_r'') represents the energy loss term.

In addition, you will also learn how to use the marker.

Brief Measurement Theory

The permittivity measurement setup is shown in Figure 4-1. The analyzer can measure relative permittivity of a plate shaped, solid dielectric material.

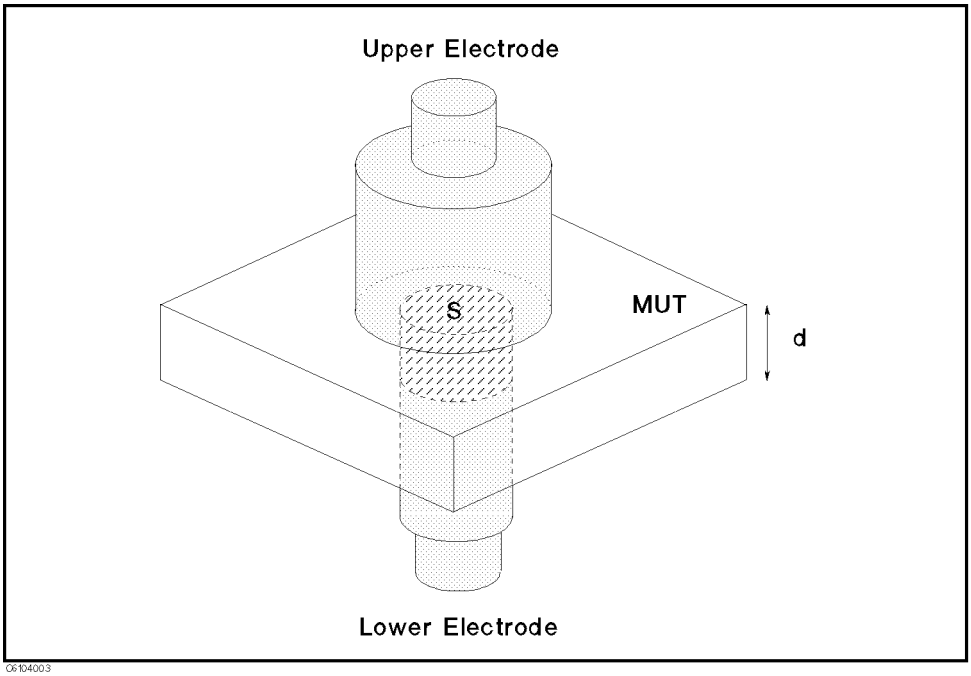

Figure 4-1. Dielectric Material Measurement

The analyzer calculates the relative permittivity from the measured admittance. The calculation equation is:

$$\dot{\varepsilon}_r = \frac{\dot{Y}_m}{j\omega\varepsilon_o}\frac{d}{S}$$

Where,

$\dot{\varepsilon}_r$	relative permittivity
$\dot{Y}_m$	measured admittance
ε_o	permittivity of free space
d	height of MUT
S	area of lower electrode

Note

The above equation is ideal, in fact, the equation in which the edge effect and parastic error of test fixture is condidered is used. For detail, refer to *Operation Manual.*

Basic Measurement Flow

Figure 4-2 shows the basic flow for a dielectric material measurement.

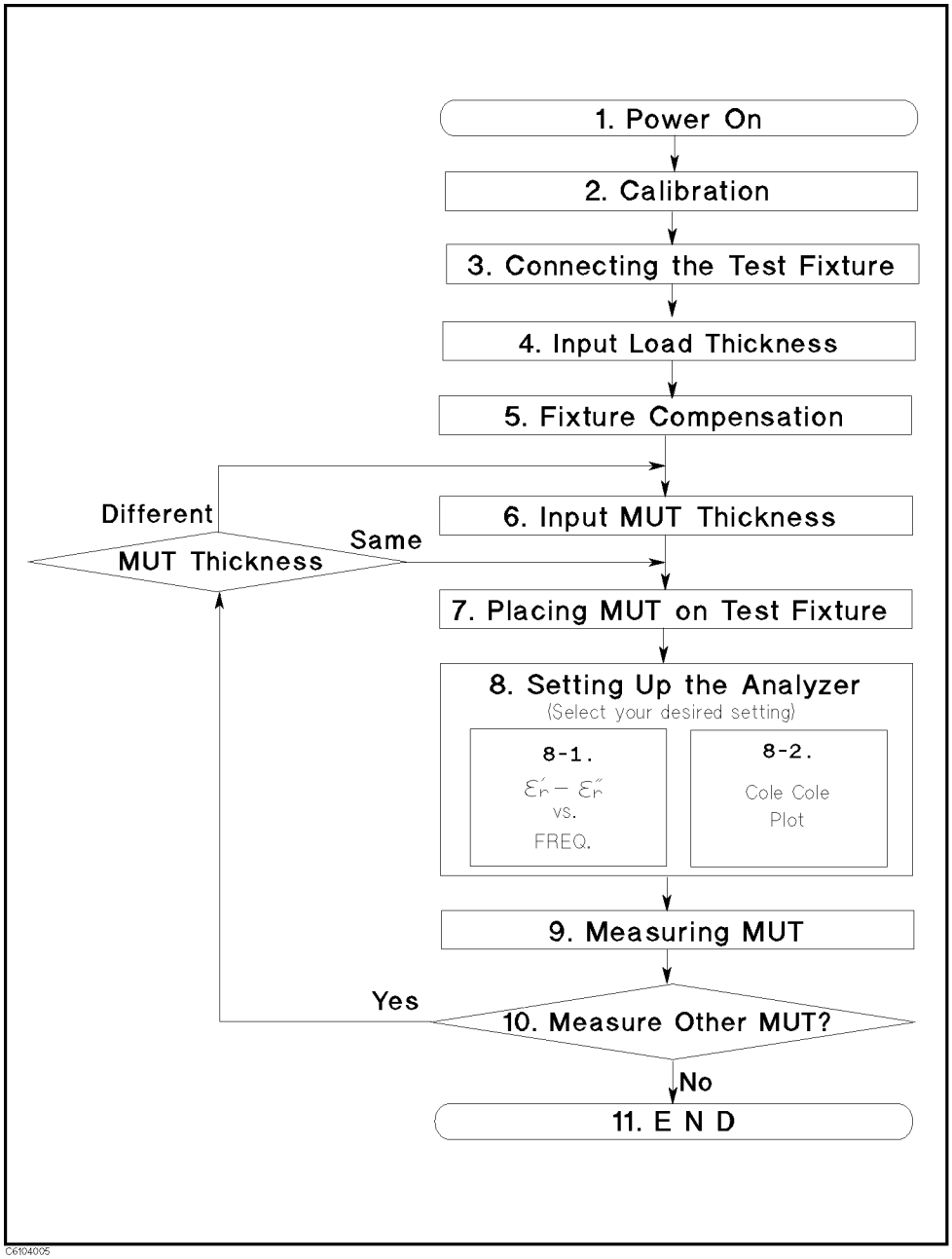

Figure 4-2. Basic Flow for Dielectric Material Measurements

Required Equipment

To perform all the steps in this quick start, the following equipment is required:

- 4291B RF Impedance/Material Analyzer
- High Impedance Test Head
- Calibration Kit
- 16453A Dielectric Material Test Fixture
- Load (Included with 16453A)
- Tweezers (Included with 16453A)
- Material Under Test (MUT)

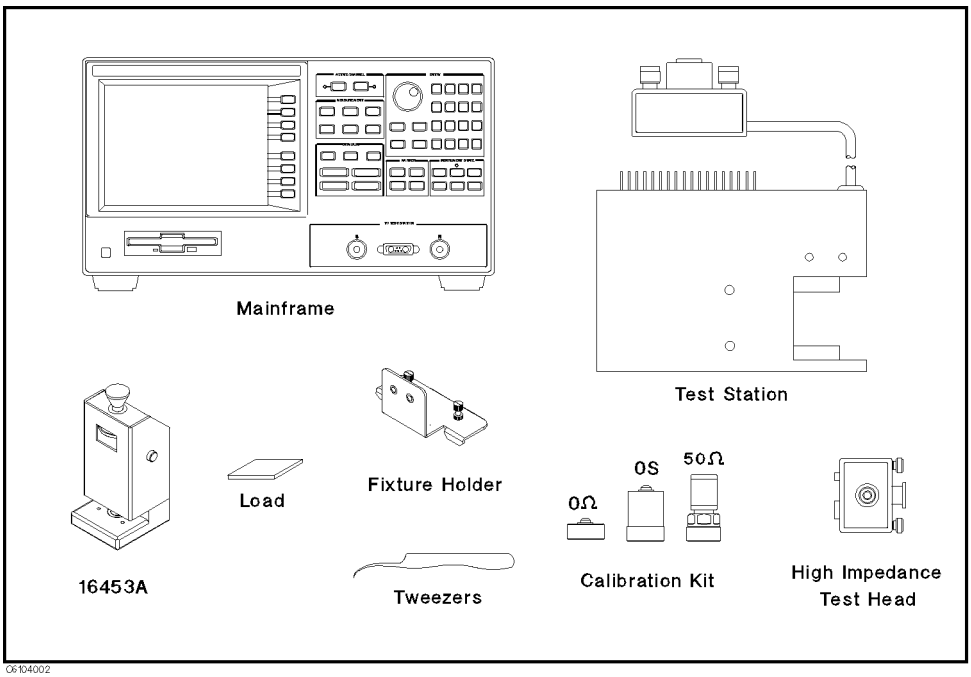

Figure 4-3. Required Equipment

Warning

The 16454A has the capability for –55 C° to 200 C° temperature measurement in environmental testing. Use globes to prevent scalding when handling heated parts.

1. Power ON

Verify both the test station and the test head are correctly setup before you turn ON the analyzer. If necessary, see Chapter 2.

1. Press the LINE switch.

   After the power-on self-test (approximately 10 seconds), the installed options and the connected test head information are displayed.

Note

Only the option numbers for 001 and 002 are displayed at power-on (if they are installed). Other installed option numbers are listed on the rear panel.

After turning on the analyzer, a 30 minute-warm-up period is required to stabilize the instrument.

2. Calibration

Calibration defines the measurement accuracy at the APC-7® on the test head. Calibration must be performed when the analyzer is turned ON. After calibration, the analyzer can measure within its specified measurement accuracy. The 0 S, 0 Ω, and 50 Ω terminations in the calibration kit are required.

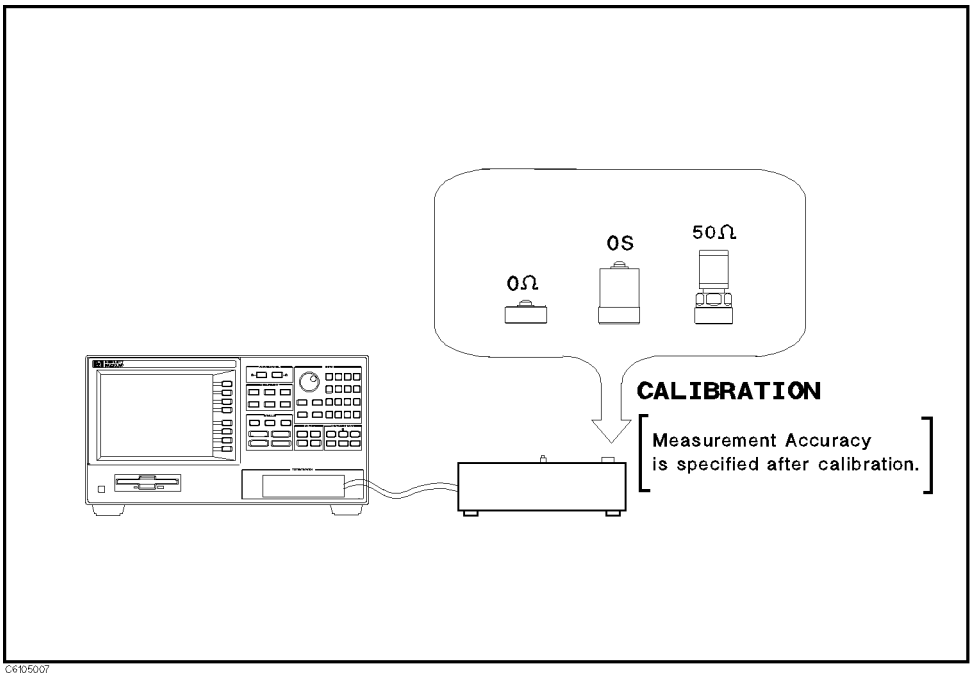

Figure 4-4. Calibration

Calibration Procedure

1. Press Cal.
2. Press CALIBRATE MENU.
3. Turn the APC-7® connector on the test head as shown in Figure 4-5.
4. Verify that the connector sleeve is extended fully as shown in Figure 4-6.

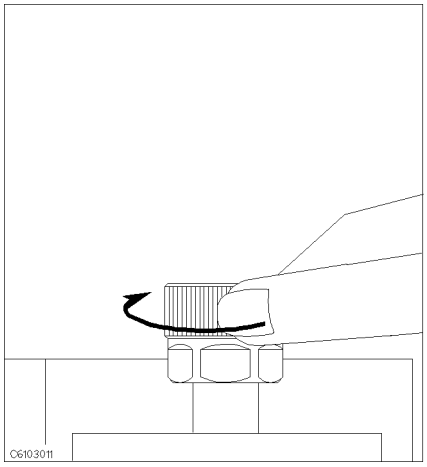

Figure 4-5.

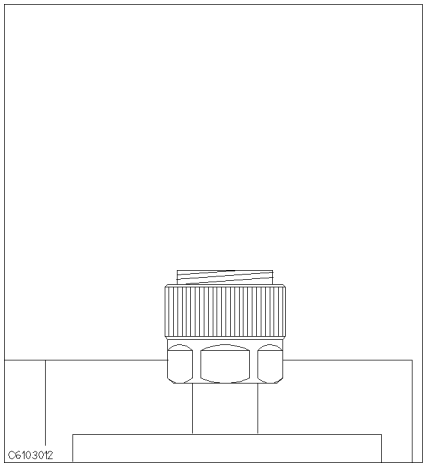

Figure 4-6.

5. Connect the 0 S termination to the APC-7® connector as shown in Figure 4-7.

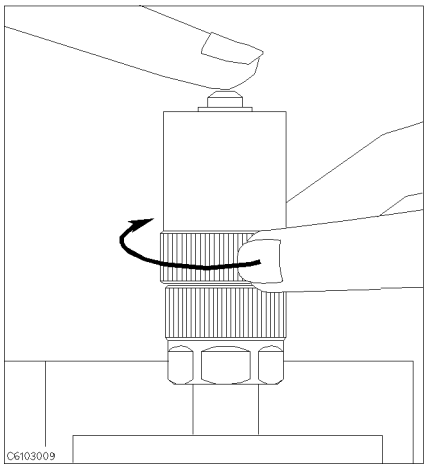

Figure 4-7.

6. Press OPEN.

   After an OPEN calibration sequence of about 1 minute, the OPEN softkey label is underlined.
7. Disconnect the 0 S termination.

8. Connect the 0 Ω termination on the APC-7® connector as shown in Figure 4-8.

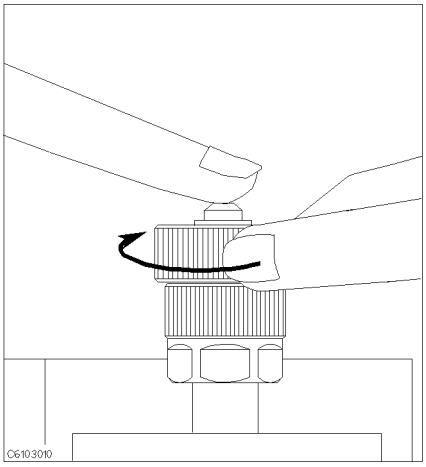

Figure 4-8.

9. Press SHORT.

   After a SHORT calibration sequence of about 1 minute, the SHORT softkey label is underlined.

10. Disconnect the 0 Ω termination.
11. Turn only the APC-7® connector nut of the 50 Ω termination as shown in Figure 4-9.
12. Verify that the connector sleeve is retracted fully as shown in Figure 4-10.

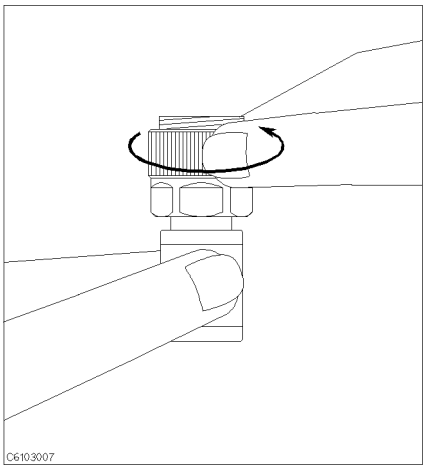

Figure 4-9.

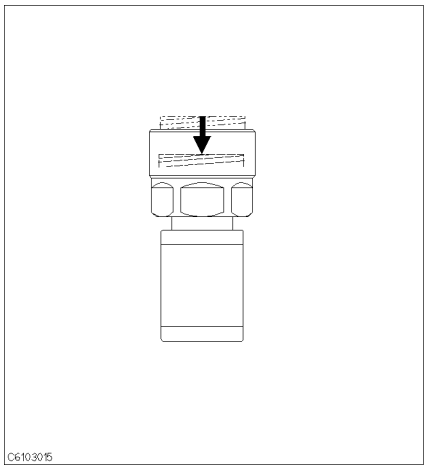

Figure 4-10.

13. Connect the 50 Ω termination on the APC-7® connector as shown in Figure 4-11.

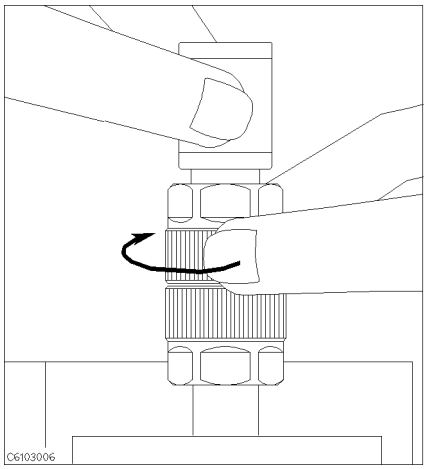

Figure 4-11.

14. Press `LOAD`.

    After a LOAD calibration sequence of about 2 minutes, the `LOAD` softkey label is underlined.

15. Disconnect the 50 Ω termination.

16. Press `DONE:CAL`.

17. Verify the two "`COR`" notations are displayed on the left of the screen.

The calibration data is erased when the analyzer is turned off.

Note

Handling and Storage of the APC-7® Connector:

- Keep connectors clean.
- Do not touch the mating plane surfaces.
- Do not set connectors contact-end down.
- Before storing, extend the sleeve or connector nut.
- Use end caps over the mating plane surfaces.
- Never store connectors loose in a box or a drawer.

3. Connecting the Test Fixture

Connecting the Test Fixture to the Test Head

To connect your fixture to the Test Head, perform the following steps:

1. Turn the APC-7® connector on the test head as shown in Figure 4-12.
2. Verify that the connector sleeve is retracted fully as shown in Figure 4-13.

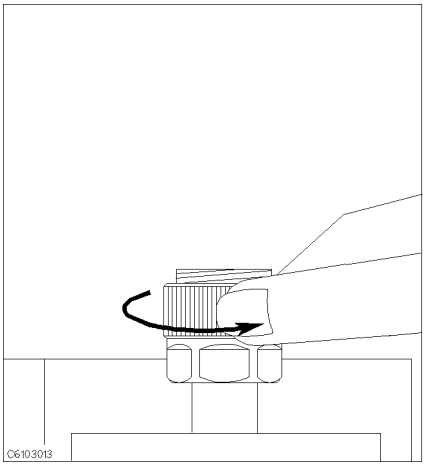

Figure 4-12.

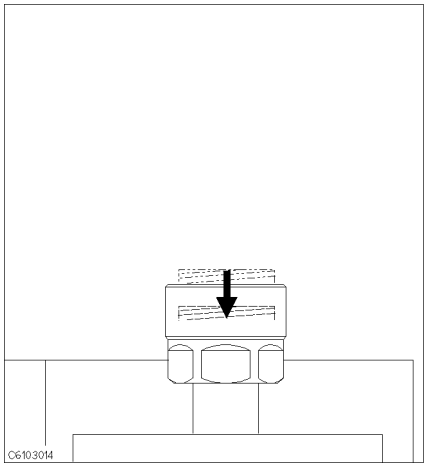

Figure 4-13.

3. Secure the test fixture to the fixture holder using the two screws.
4. Connect the connector on the underside of the test fixture to the APC-7 connector on the test head.
5. Secure the fixture holder to the test station using the two screws.

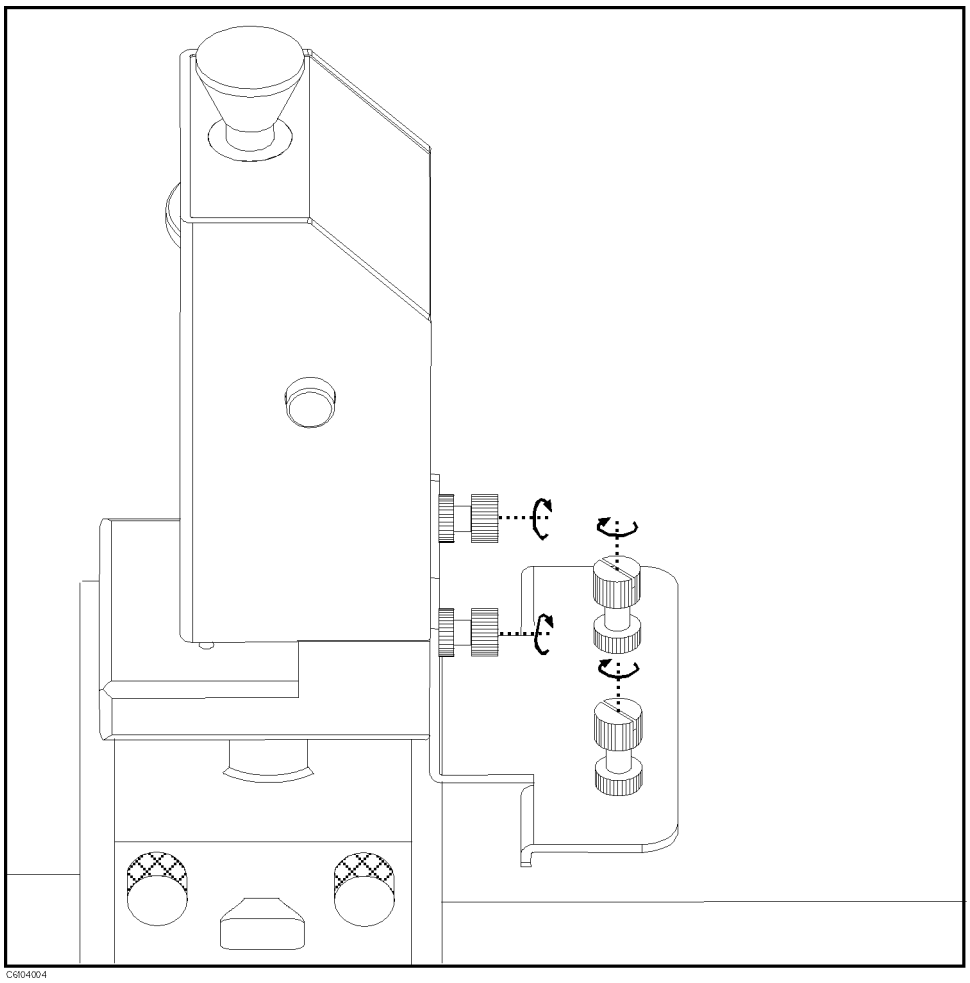

Figure 4-14. Connecting the Test Fixtures

Selecting the Test Fixture

Perform the following steps to select the 16453A as the test fixture:

1. Press (Meas) `FIXTURE` `PERMITTVTY 16453`
2. Press `RETURN`

After you select the 16453A as a test fixture, the analyzer is set to the dielectric material measurement mode.

4. Input Load Thickness

Before fixture compensation, you need to input the load thickness value. The load thickness value is written on the case of the load.

1. Press (Cal) COMPEN KIT [TEFLON].
2. Press MODIFY [TEFLON].
3. Press DEFINE STANDARD.
4. Press THICKNESS.
5. Input the load thickness value. Then, press the unit terminator key.
6. Press STD DONE (DEFINED).
7. Press KIT DONE (MODIFIED).
8. Verify that the second soft key from bottom is COMPEN KIT [TEFLO*].

   The load thickness value will be lost when the analyzer is turned off. However, it can be saved to memory in the analyzer by performing the following procedure. If you do this, you do not need to input the load thickness value when you turn power back on. However, if the analyzer has been turned off for approximately 72 hours or more, the load thickness value in memory is lost.

9. Press COMPENKIT [TEFLO*] SAVE USER KIT.
10. Press USER KIT.
11. Verify that USER KIT softkey label is underlined.
12. Press RETURN.

Note The load thickness value that is written on the label on the case is a typical value. When you need more accurate measurements, measure the load using a micrometer or calipers.

Note The load is made of the teflon whose relative permittivity is 2.1. The relative permittivity value has already memoried in the analyzer.

5. Fixture Compensation

Fixture compensation corrects the parasitic error existing between the test fixture electrode and the test head APC-7® connector (where the measurement accuracy is specified) and also calculate edge effect factor. Fixture compensation for dielectric material measurements requires OPEN, SHORT and LOAD compensations.

Note

The pressure to sandwich the MUT is adjustable. It should be at maximum as much as possible.

Performing SHORT Compensation

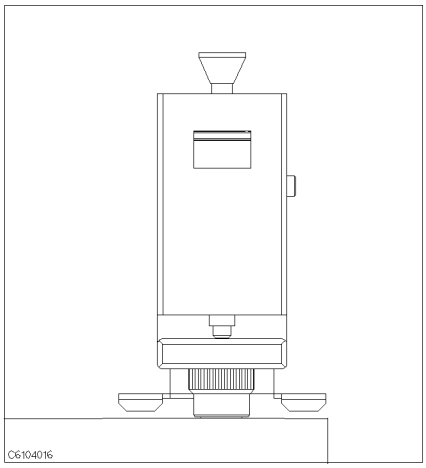

1. Verify that the upper and the lower electrodes are making contact.

SHORT Compensation Key Sequence

When the test fixture is ready for the short compensation sequence, press the following front panel keys:

1. Press (Cal) `FIXTURE COMPEN` `COMPEN MENU` `SHORT`.

   After the short compensation sequence is done, the `SHORT` softkey label is underlined.

Performing OPEN Compensation

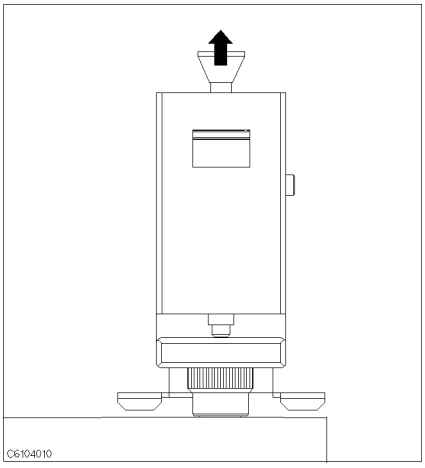

1. Pull up the knob.

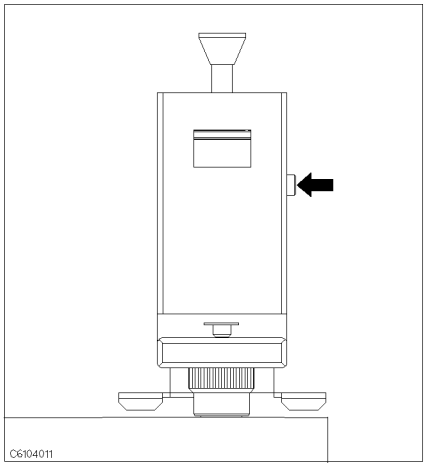

2. Press the latch button while pulling up the knob.

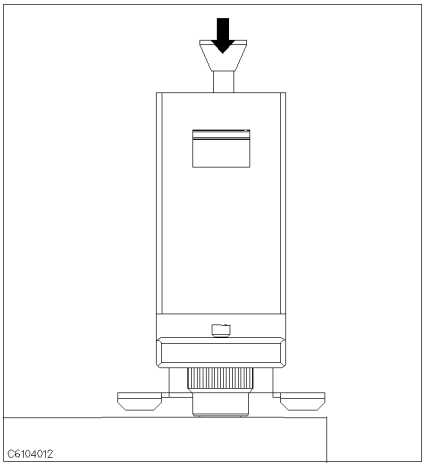

3. Release the knob so that the knob is latched.

OPEN Compensation Key Sequence

When the test fixture is ready for the open compensation sequence, press the following front panel keys:

1. Press `OPEN`.

   After the open compensation sequence is done, the `OPEN` softkey label is underlined.

Performing LOAD Compensation

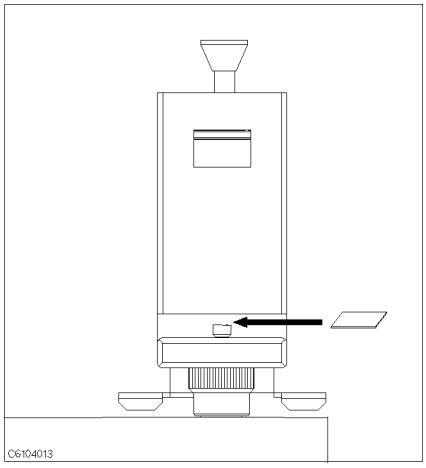

1. Place the MUT on the lower electrode.

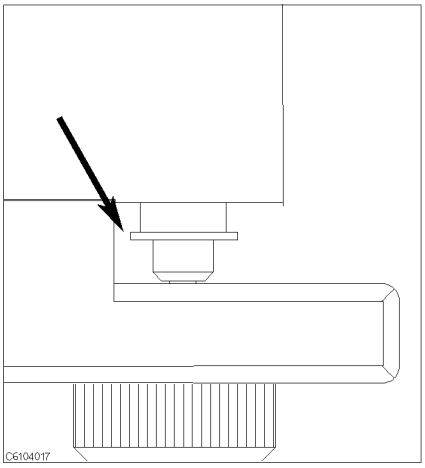

2. Don't touch the load to the fixture body.

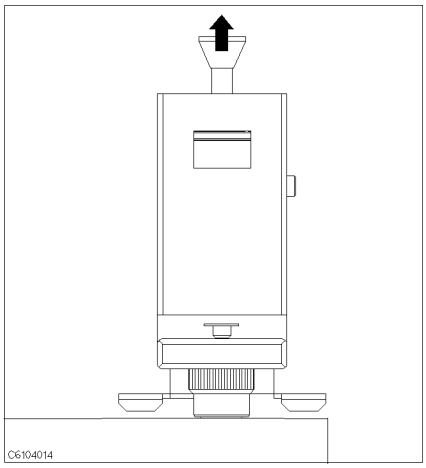

3. Pull up the knob to release the latch.

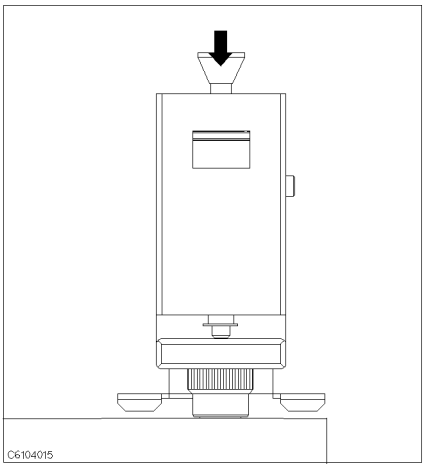

4. Press down the knob to sandwich the MUT between the electrodes. Then press the knob lightly once more to ensure proper contacts between electrodes and to stabilize the MUT.

LOAD Compensation Key Sequence

When the test fixture is ready for the load compensation sequence, press the following front panel keys:

1. Press `LOAD`.

   After the load compensation sequence is done, the `LOAD` softkey label is underlined.

2. Press `DONE: COMPEN`

Note

Don't force the upper electrode in a lateral direction.

6. Input the MUT Thickness

Before you measure the permittivity, you must input the thickness of your MUT. Measure the thickness using calipers or a micrometer. The applicable MUT thickness must be less than 3 mm. The MUT width or diameter must be longer than 15 mm. The surface of the MUT must be flat to contact the MUT to the entire surface of electrodes.

1. Press (Meas) `MATERIAL SIZE` `THICKNESS`.
2. Input the thickness of your MUT. Then press the unit terminator key.
3. Press `DONE (MODIFIED)`.

7. Placing the MUT in the Test Fixture

How to place the MUT to the 16453A is shown in below.

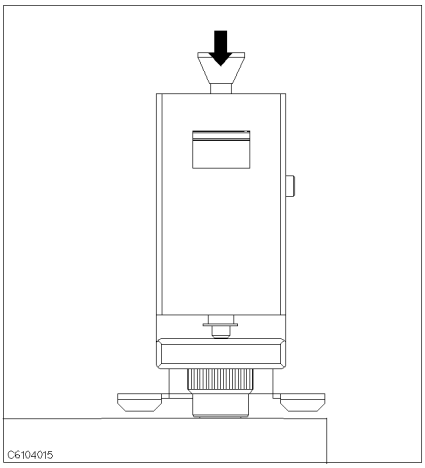

1. Sandwich the MUT between the electrodes in the same way you placed the load during the LOAD compensation.

Note

After pulling down the knob, push down the knob lightly once more to ensure proper contacts between electrodes and to stablilize the MUT.

Note

If the thickness of the MUT is changed with respect to pressure, a measurement error might occur if the applied pressure is not set at maximum. Small spaces (gaps) between the electrodes and the MUT could lead to measrement error. The data required when applying maximum pressure is defined by the specification.

8. Setting up the Analyzer

Before you start the measurement, you must set up the analyzer to match your measurement requirements. This section provides the setup procedures for the following measurements:

- Frequency characteristics of ε_r'-tan δ
- Cole-Cole Plot

The setup procedure for each measurement is described in the following pages. Set up your analyzer according to the applicable procedure.

8-1. Setting up for ε_r' - tan δ vs. Frequency

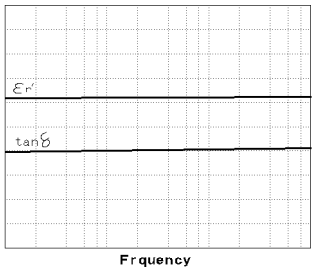

The example setup for this measurement is as follows.

Table 4-1. MEASUREMENT Block Parameter Setting

	Channel 1 Setting	Channel 2 Setting
Parameter	ε_r'	tan δ
Format	Linear	Linear

Table 4-2. STIMULUS Block Parameter Setting

Sweep Parameter	Frequency
Sweep Type	Log
Frequency Range	1 MHz to 1 GHz
OSC Level	500 mV

To set up the analyzer, press the front panel keys as shown in the following procedure:

- MEASUREMENT Block

1. (Meas) (Chan 1) PRMEABLTY REAL (ε_r') (Ch1 Parameter = ε_r')
2. (Meas) (Chan 2) LOSS TNGNT (tan δ) (Ch2 Parameter = tan δ)
3. (Format) (Chan 1) LIN Y-AXIS (Ch1 Format = Linear)
4. (Format) (Chan 2) LIN Y-AXIS (Ch2 Format = Linear)

- STIMULUS Block

5. (Sweep) SWEEP MENU SWP SRC: FREQ (Sweep = Frequency)
6. (Sweep) SWEEP MENU LOG (Sweep Type = Log)
7. (Start) (1) (M/μ) (Start = 1 MHz)
8. (Stop) (1) (G/n) (Stop = 1 GHz)
9. (Source) OSC LEVEL (0) (.) (5) (x1) (OSC Level = 500 mV)

The OSC level sweep and dc bias sweep (option 001) can be also selected.

Note

When some material which has large value of ε_r is measured, since the measurement circuit occasionally oscillates over 1 GHz, the measurement error may be increased.

Display Annotations

The settings that you set in the previous section are displayed on the LCD as annotations. The annotations are described below. Verify that they are set correctly.

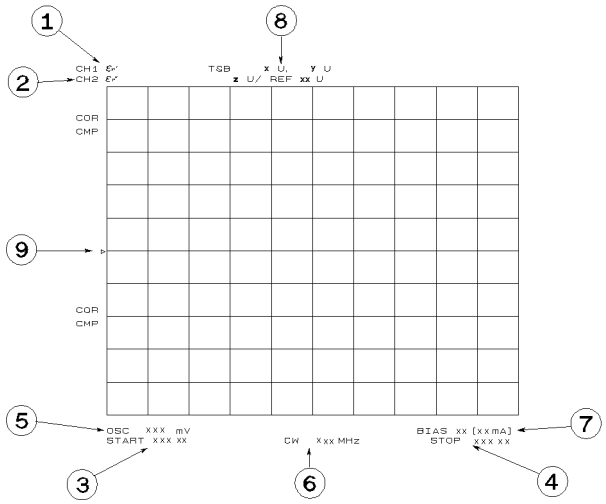

① measurement parameter for channel 1
② measurement parameter for channel 2
③ stimulus start value
④ stimulus stop value
⑤ OSC level value (frequency, dc bias sweep only)
⑥ CW frequency (OSC Level, dc bias sweep only)
⑦ dc bias value (option 001 only)
⑧ grid scale (you do not have set the scale in the previous section).

- `T&B x, y` (for log, linear format)
  The value of the top of grid is `x`.
  The value of the bottom of grid is `y`.
- `z / REF xx` (for linear format)
  The scale/div value is `z`.
  The value of the reference position at which the ▶ ⑨ locates is `xx`.

Note

The analyzer has two channels that provide independent measurement and display of the data. The traces and grids of the two channels are displayed, one over the other. The (Chan 1) and (Chan 2) keys (in the ACTIVE CHANNEL block) select which channel is activated. All the channel specific functions that are selected apply to the active channel. When you want to display the trace of either channel 1 or 2, toggle `DUAL CHAN ON off` to `on OFF` under (Display), and then select (Chan 1) or (Chan 2)

Jump to “9. Measuring the MUT”

8-2. Setting up for a Cole-Cole Plot

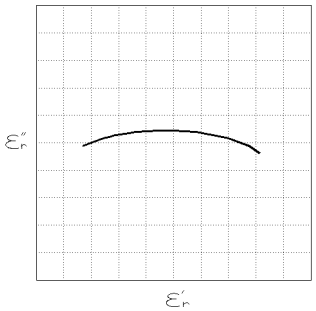

The example setup for this measurement is as follows.

Table 4-3. MEASUREMENT Block Parameter Setting

	Channel 1 Setting
Parameter	ε_r'-ε_r''
Format	Complex Plane

Table 4-4. STIMULUS Block Parameter Setting

Sweep Parameter	Frequency
Sweep Type	Linear
Frequency Range	1 MHz to 10 MHz
OSC Level	500 mV

To set up the analyzer, press the front panel keys as shown in the following procedure:

- MEASUREMENT Block

1. (Display) DUAL CHAN ON off (Dual Channel OFF)
2. (Chan 1) (Format) COMPLEX PLANE (Ch1 Format = Complex Plane)

- STIMULUS Block

3. (Sweep) SWEEP SOURCE FREQUENCY (Sweep = Frequency)
4. (Sweep) SWEEP TYPE LIN (Sweep Type = Linear)
5. (Start) (1) (M/μ) (Start = 1 MHz)
6. (Stop) (1) (0) (M/μ) (Stop = 10 MHz)
7. (Source) OSC LEVEL (5) (0) (0) (k/m) (OSC Level = 500 mV)

When COMPLEX PLANE is selected as the format, the DUAL CHAN ON off or SPLIT DISP on OFF under (Display) should be selected to avoid displaying the two different format traces, one over the other.

Display Annotations

The settings that you set in the previous section are displayed on the LCD as annotations. The annotations are described below. Verify that they are set correctly.

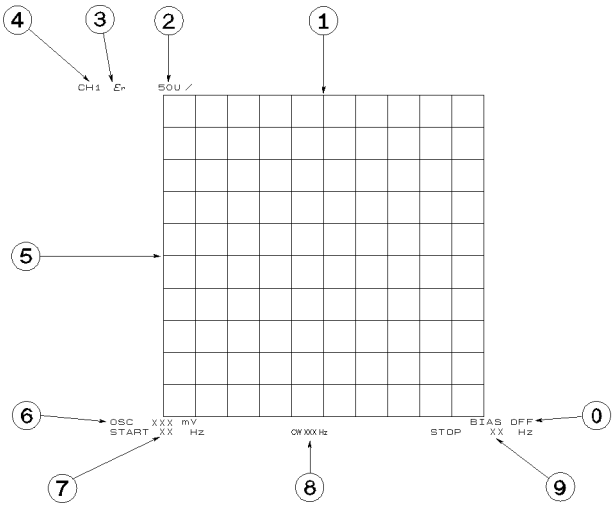

Figure 4-15. Complex Plane Annotation

① reference position for horizontal axis
② scale/div value for horizontal axis and vertical axis
③ measurement parameter
④ measurement channel
⑤ reference position for vertical axis
⑥ OSC level
⑦ stimulus start value
⑧ CW frequency (OSC Level, dc bias sweep only)
⑨ stimulus stop value
⓪ dc bias value (option 001 only)

Pressing (Scale Ref) `MORE` `REFERENCE X VALUE` or `REFERENCE Y VALUE` allows you to display or input the reference position values.

9. Measuring the MUT

After you place the MUT on the test fixture, the measured result is displayed.

Performing Automatic Scaling

Often, the trace obtained after specifying the frequency range is too large or too small for the grid. However, by using the automatic scaling function, you can obtain the optimum scale setting.

1. Press (Chan 1) or (Chan 2) to activate the required channel.
2. Press (Scale Ref).
3. Press AUTO SCALE to scale the trace of selected channel.

You will get the measurement results shown on the first page of this chapter.

If you want to change scale, press (Scale Ref) SCALE/DIV and turn the rotary knob or input scale value as required.

Using the Marker

Marker functions allow you to read out the trace values and the frequency. They also allow you to move the marker to a specific point (for example, the maximum, the minimum, or the peak point). This procedure shows you how to read a measured value. See "Searching for a Specific Point" in Chapter 6 for information on how to search for a specific point.

Marker for Frequency/OSC Level/dc bias Characteristics

1. Press (Marker).
2. Turn the rotary knob until the marker moves to the point where you want to read the measured value.
3. Read the marker value displayed on the upper right of the display.

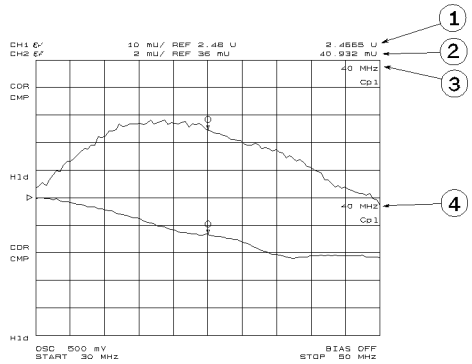

① Marker value for channel 1
② Marker value for channel 2
③ Marker stimulus for channel 1
④ Marker stimulus for channel 2

Marker for a Cole-Cole Plot

1. Press (Marker).
2. Turn the rotary knob until the marker moves to the point where you want to read the measured value.
3. Read the marker value displayed on the upper right of the display.

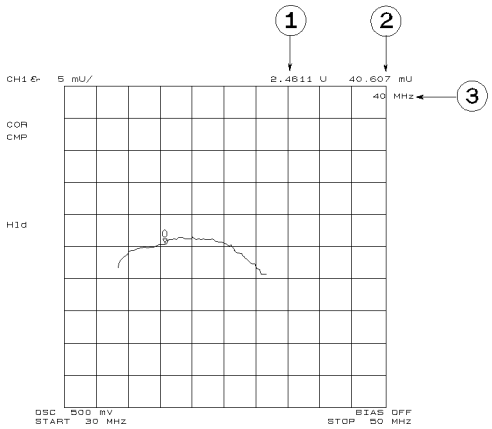

① Marker value for horizontal position (X axis)
② Marker value for vertical position (Y axis)
③ Marker stimulus

10. Measuring Other MUTs

If you want to measure other MUTs on different setups, start from "7. Placing the MUT in the Test Fixture". If the next MUT is a different size, start from "6. Input the MUT Thickness".

For More Information

Chapter 6 provides procedures for the analyzer's key features and measurement techniques (for example, averaging, monitoring level, applying dc bias, saving/recalling, and printing).

5

Magnetic Material Measurement Quick Start

Overview

This chapter provides a quick start guide for magnetic material measurements. New users can quickly become familiar with the analyzer by performing these procedures. In this chapter, ferrite measurements are used to help you learn how to use the analyzer. At the end of the quick start procedures, you will have learned how to make the following measurement:

(1). Frequency characteristics of relative permeability.
(2). OSC level characteristics of relative permeability.
(3). Dc bias current characteristics of relative permeability.

The analyzer displays relative permeability in a complex format. The real part (μ_r') represents the energy storage and the imaginary part (μ_r'') represents the energy loss term.

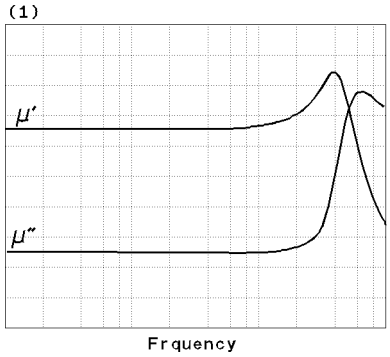

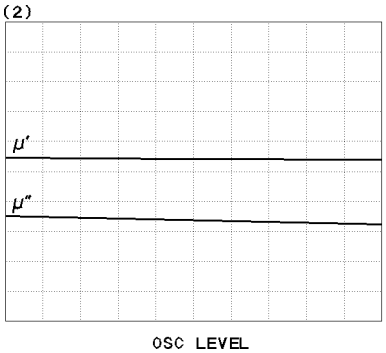

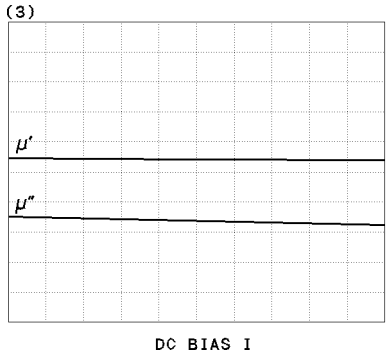

In addition, you will also learn how to do the following:

- Use the marker

Brief Measurement Theory

The permeability measurement signal flow is shown in Figure 5-1. The analyzer can measure relative permeability for a toroidal shape magnetic material.

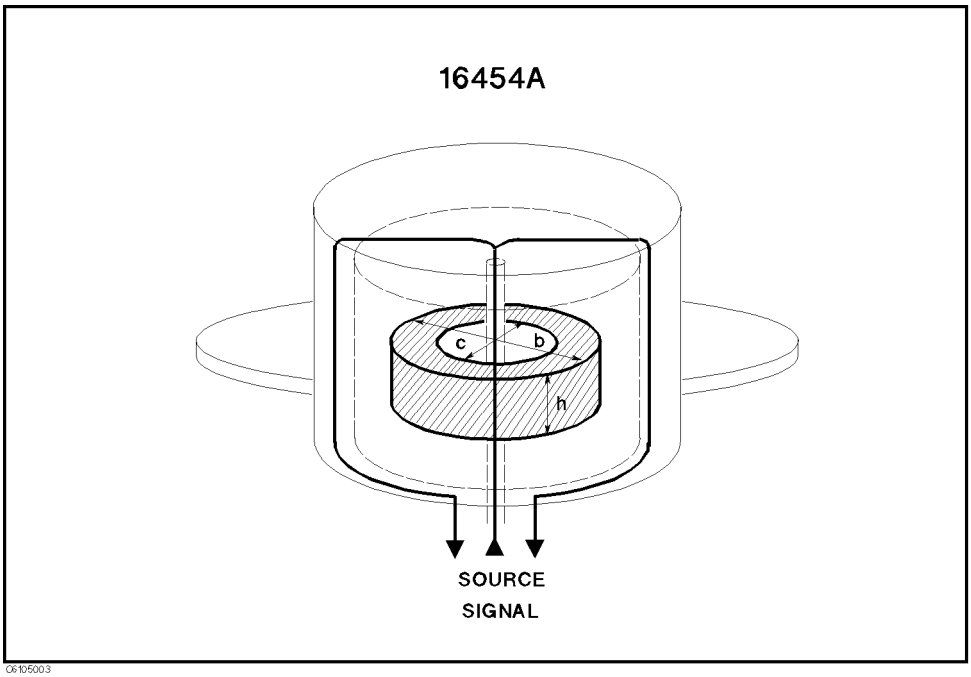

Figure 5-1. Magnetic Material Measurement

The analyzer calculates the relative permeability from the impedance. The calculation formula is:

$$\dot{\mu} = \frac{\dot{Z}m}{j\omega\mu_o}\frac{2\pi}{h\ln\frac{b}{c}} + 1$$

Where,

$\dot{\mu}$	relative permeability
$\dot{Z}m$	measured impedance
μ_o	permeability of free space
h	height of MUT (Material Under Test)
b	outer diameter of MUT
c	inner diameter of MUT

Basic Measurement Flow

Figure 5-2 shows the basic flow for a magnetic material measurement.

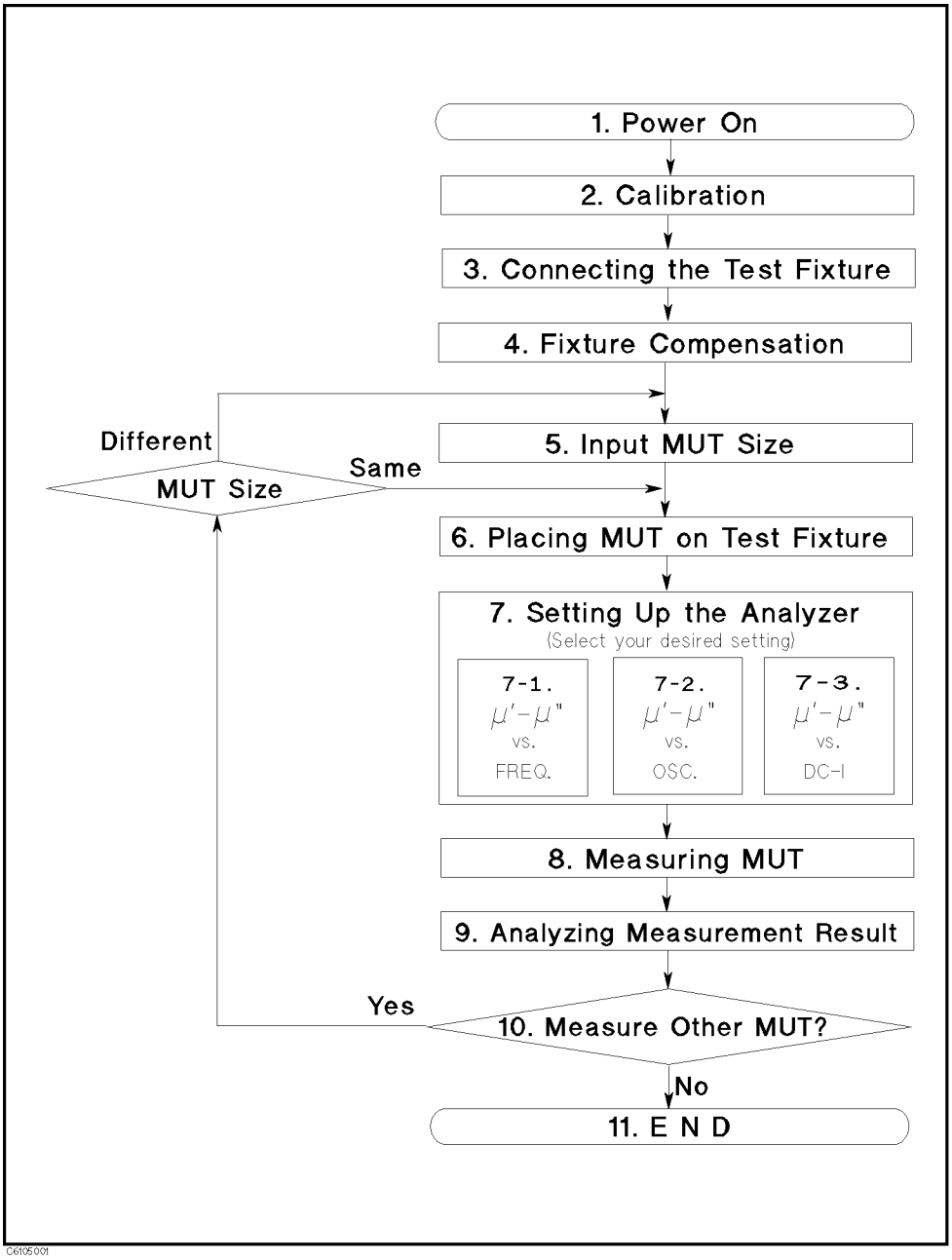

Figure 5-2. Basic Flow for Magnetic Material Measurements

Required Equipment

To perform all the steps in this quick start, the following equipment is required:

- 4291B RF Impedance/Material Analyzer
- Low Impedance Test Head
- Calibration Kit
- 16454A Magnetic Material Test Fixture
- Fixture Holder (Included with 16454A)
- MUT Holder (Included with 16454A)
- Tweezers (Included with 16454A)
- Material Under Test (MUT) (Ferrite material is demonstrated in this guide.)

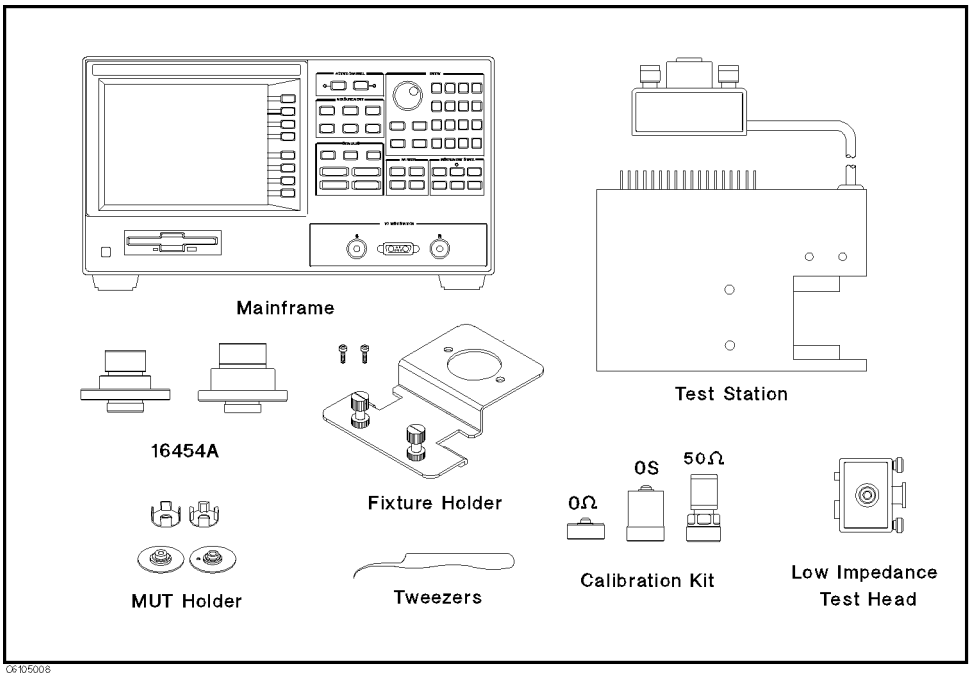

Figure 5-3. Required Equipment

Warning

The 16454A has the capability for –55 C° to 200 C° temperature measurement in environmental testing. Use globes to prevent scalding when handling heated parts.

1. Power ON

Verify both the test station and the test head are correctly setup before you turn ON the analyzer. If necessary, see Chapter 2.

1. Press the LINE switch.

   After the power-on self-test (approximately 10 seconds), the installed options and the connected test head information are displayed.

Note

Only the option numbers for 001 and 002 are displayed at power-on (if they are installed). Other installed option numbers are listed on the rear panel.

After turning on the analyzer, a 30 minute-warm-up period is required to stabilize the instrument.

2. Calibration

Calibration defines the measurement accuracy at the APC-7® on the test head. The calibration must be performed when the analyzer is turned ON. After the calibration, the analyzer can measure within its specified measurement accuracy. The 0 S, 0 Ω, and 50 Ω terminations in the calibration kit are required.

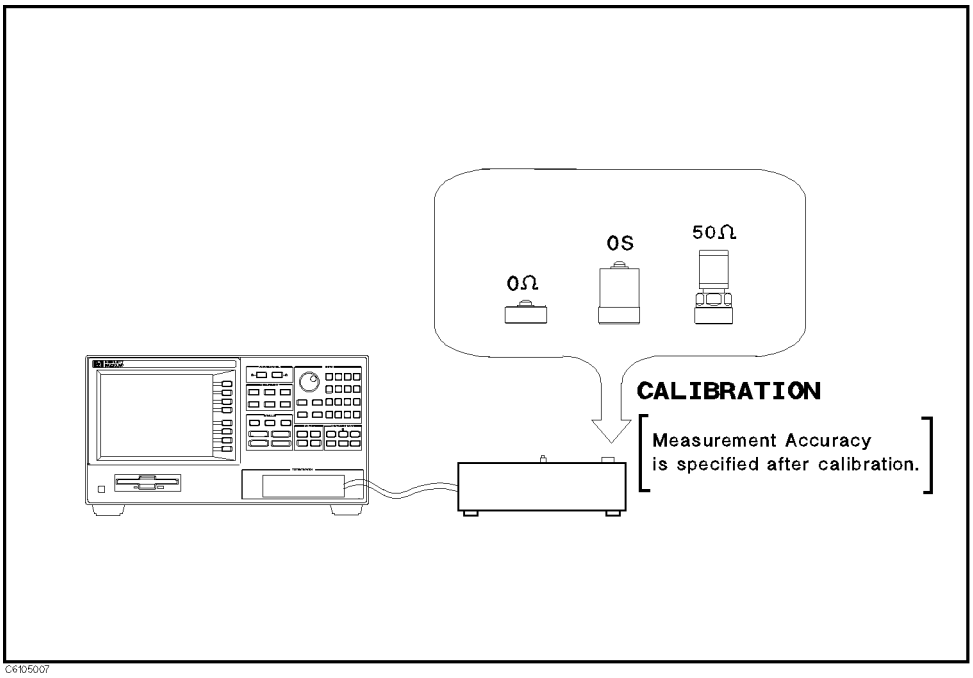

Figure 5-4. Calibration

Calibration Procedure

1. Press Cal.
2. Press CALIBRATE MENU.
3. Turn the APC-7® connector on the test head as shown in Figure 5-5.
4. Verify that the connector sleeve is extended fully as shown in Figure 5-6.

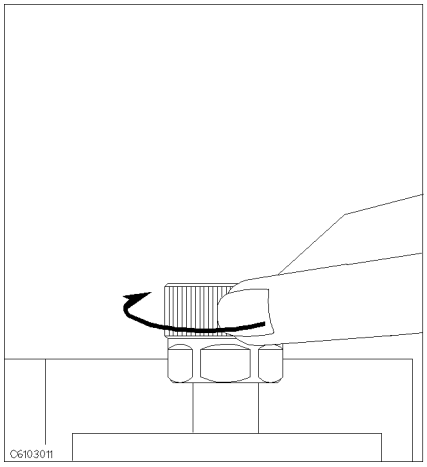

Figure 5-5.

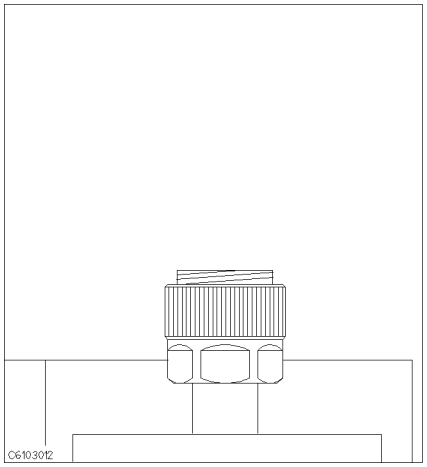

Figure 5-6.

5. Connect the 0 S termination to the APC-7® connector as shown in Figure 5-7.

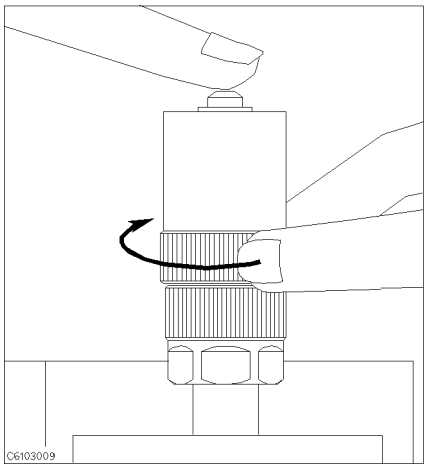

Figure 5-7.

6. Press OPEN.

   After an OPEN calibration sequence of about 1 minute, the OPEN softkey label is underlined.
7. Disconnect the 0 S termination.

8. Connect the 0 Ω termination on the APC-7® connector as shown in Figure 5-8.

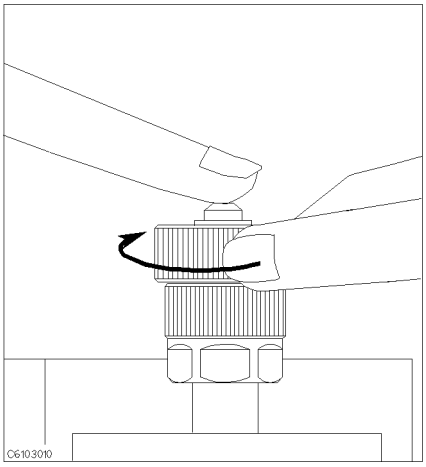

Figure 5-8.

9. Press SHORT.

   After a SHORT calibration sequence of about 1 minute, the SHORT softkey label is underlined.

10. Disconnect the 0 Ω termination.
11. Turn only the APC-7® connector nut of the 50 Ω termination as shown in Figure 5-9.
12. Verify that the connector sleeve is retracted fully as shown in Figure 5-10.

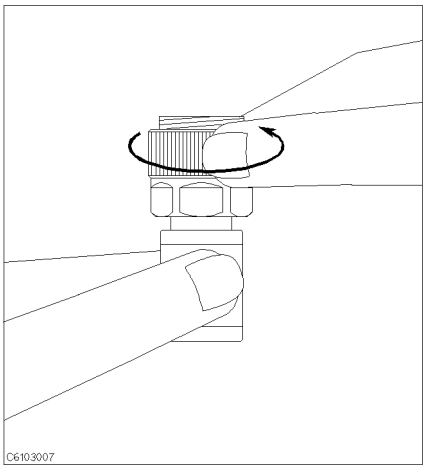

Figure 5-9.

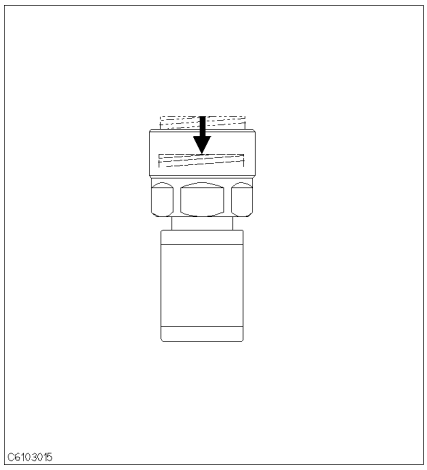

Figure 5-10.

13. Connect the 50 Ω termination on the APC-7® connector as shown in Figure 5-11.

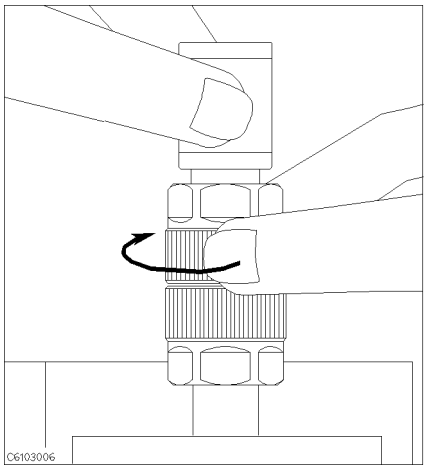

Figure 5-11.

14. Press `LOAD`.

    After a LOAD calibration sequence of about 2 minutes, the `LOAD` softkey label is underlined.

15. Disconnect the 50 Ω termination.

16. Press `DONE:CAL`.

17. Verify the two "`COR`" notations are displayed on the left of the screen.

The calibration data is erased when the analyzer is turned off.

Note

Handling and Storage of the APC-7® Connector:

- Keep connectors clean.
- Do not touch the mating plane surfaces.
- Do not set connectors contact-end down.
- Before storing, extend the sleeve or connector nut.
- Use end caps over the mating plane surfaces.
- Never store connectors loose in a box or a drawer.

3. Connecting the Test Fixture

Selecting Fixture and Holder

The 16454A consists of two fixtures, a large one and a small one. The applicable MUT size for each fixture is listed in Table 5-1.

Table 5-1. MUT Size For Test Fixtures

Fixture	Small		Large	
Holder	**A**	**B**	**C**	**D**
MUT Outer Diameter (mm)	$\leq \phi 8$ mm	$\leq \phi 6$ mm	$\leq \phi 20$ mm	$\leq \phi 20$ mm
MUT Inner Diameter (mm)	$\geq \phi 3.1$ mm	$\geq \phi 3.1$ mm	$\geq \phi 6$ mm	$\geq \phi 5$ mm
MUT Height (mm)	≤ 3 mm	≤ 3 mm	≤ 10 mm	≤ 10 mm

Figure 5-12 shows the dimensions of the MUT holder.

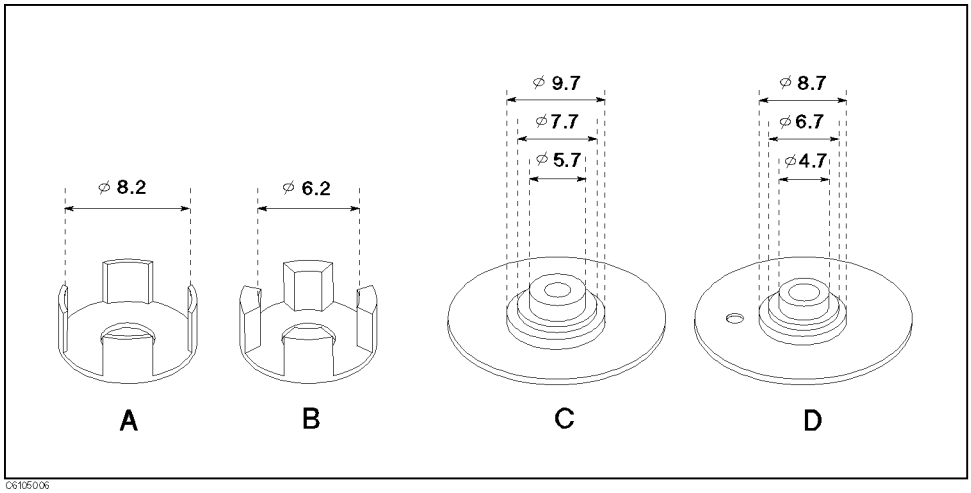

Figure 5-12. Dimensions of the MUT Holder

Connecting the Test Fixture to the Test Head

To connect your fixture to the Test Head, perform the following steps:

1. Turn the APC-7® connector on the test head as shown in Figure 5-13.
2. Verify that the connector sleeve is retracted fully as shown in Figure 5-14.

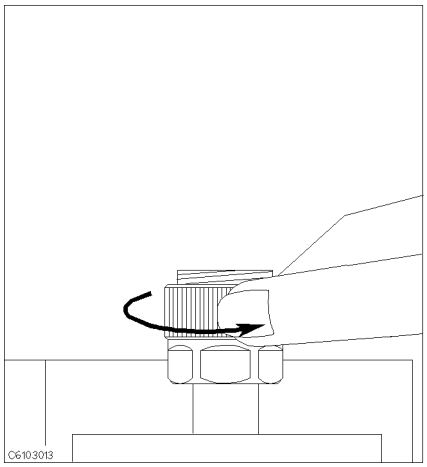

Figure 5-13.

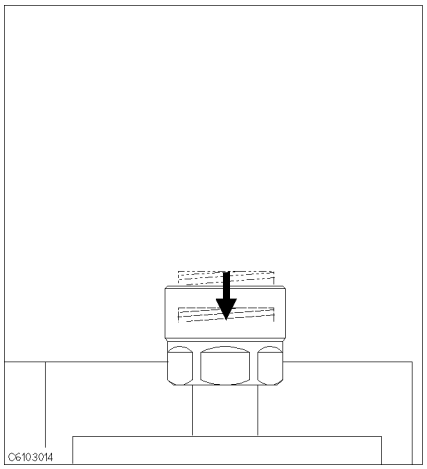

Figure 5-14.

3. Secure the test fixture to the fixture holder using the two screws.
4. Connect the connector on the underside of the test fixture to the APC-7 connector on the test head.
5. Secure the fixture holder to the test station using the two screws.

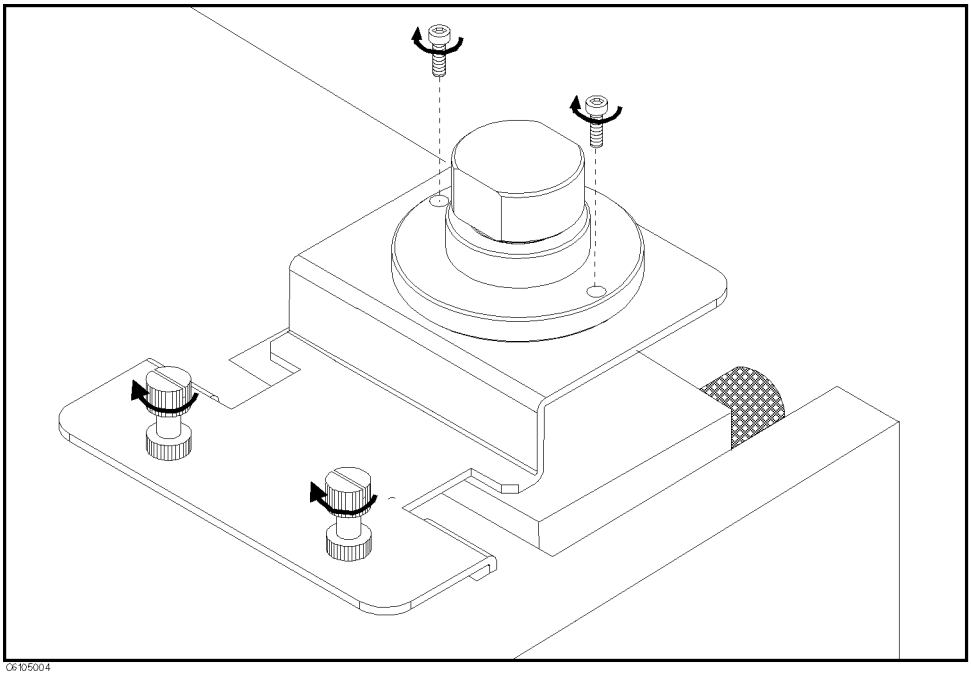

Figure 5-15. Connecting the Test Fixtures (16454A Small)

Selecting the Test Fixture

Perform the following steps to select the 16454A as the test fixture:

1. Press (Meas) FIXTURE PERMEABLTY
2. Press SELECT FIXTURE
3. Select the fixture that you are using.

To	Press
small	FIXTURE 16454(S)
large	16454(L)

4. Press RETURN

After you select the 16454A as a test fixture, the analyzer is set to the magnetic material measurement mode.

4. Fixture Compensation

Fixture compensation reduces the parasitic error existing between the test fixture electrode and the test head APC-7® connector (where the measurement accuracy is specified). Fixture compensation for the magnetic material measurement requires only the SHORT compensation.

Performing SHORT Compensation

The SHORT Compensation corrects for the residual impedance due to the test fixture.

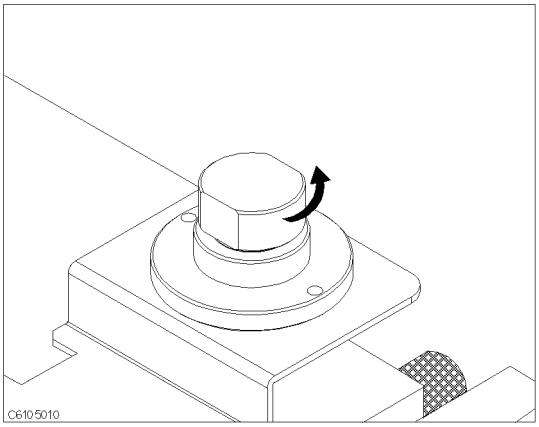

1. Remove the cap of the fixture.

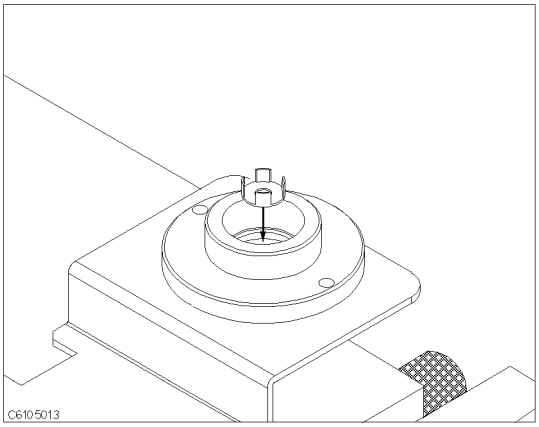

2. Place nothing or a MUT holder only in the fixture.

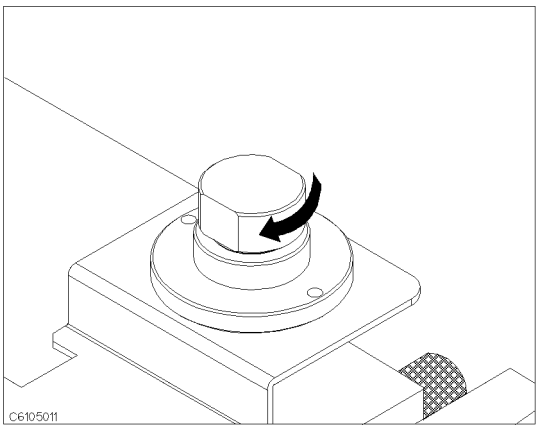

3. Replace the cap by screwing tightly. :

SHORT Compensation Key Sequence

When the test fixture is ready for the SHORT compensation sequence, press the following front panel keys:

1. Press (Cal) `FIXTURE COMPEN` `COMPEN MENU` `SHORT`.

   After the SHORT compensation sequence is done, the `SHORT` softkey label is underlined.

2. Press `COMPEN:DONE`

5. Input the MUT Size

1. Press (Meas) `MATERIAL SIZE`.
2. Press `INNER DIAMETER`.
3. Input the inner diameter of your MUT (*c* in Figure 5-16).
4. Press `OUTER DIAMETER`.
5. Input the outer diameter of your MUT (*b* in Figure 5-16).
6. Press `HEIGHT`.
7. Input the height of your MUT (*h* in Figure 5-16).
8. Press `DONE (MODIFIED)`.

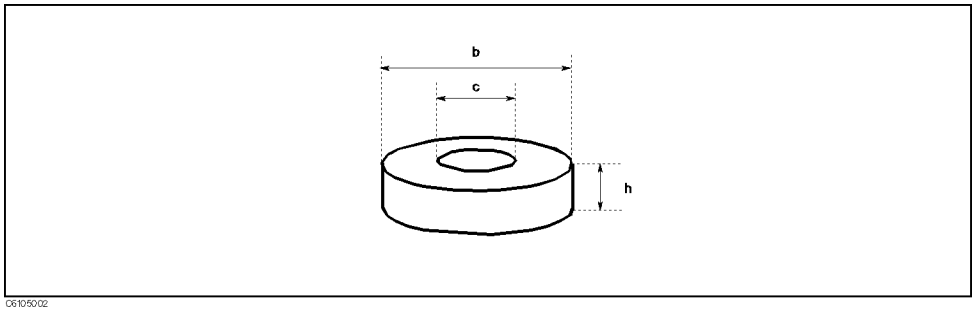

Figure 5-16. Dimensions of the MUT

MUT Size For Test Fixtures

Fixture	Small		Large	
Holder	**A**	**B**	**C**	**D**
MUT Outer Diameter (mm)	$\leq \phi 8$ mm	$\leq \phi 6$ mm	$\leq \phi 20$ mm	$\leq \phi 20$ mm
MUT Inner Diameter (mm)	$\geq \phi 3.1$ mm	$\geq \phi 3.1$ mm	$\geq \phi 6$ mm	$\geq \phi 5$ mm
MUT Height (mm)	≤ 3 mm	≤ 3 mm	≤ 10 mm	≤ 10 mm

6. Placing the MUT on the Test Fixture

How to place the MUT on the 16454A is shown below:

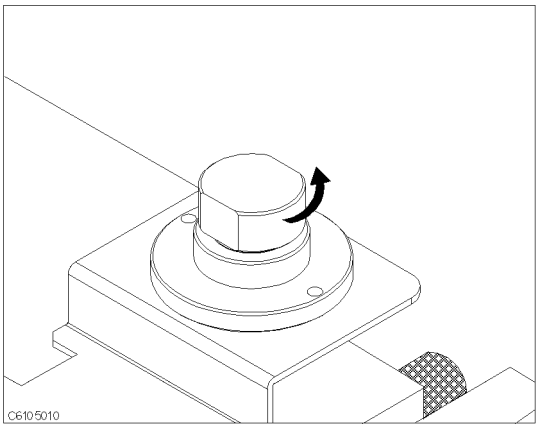

1. Remove the cap of the fixture.

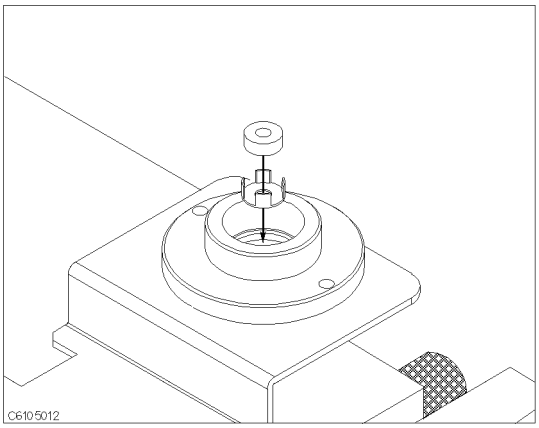

2. Place a MUT on the MUT holder in the fixture.

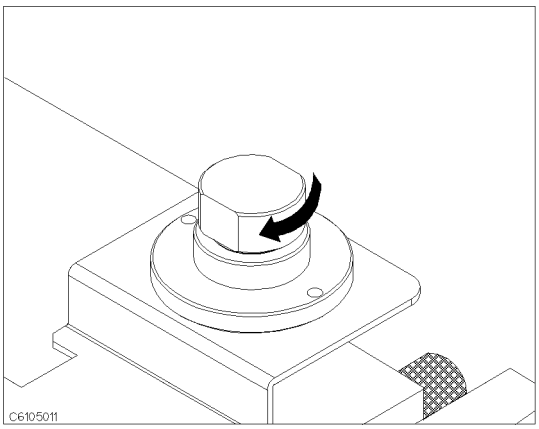

3. Replace the cap by screwing tightly. :

7. Setting up the Analyzer

Before you start the measurement, you must set up the analyzer to fit your measurement requirements. This section provides the setup procedures for the following measurements:

- Frequency characteristics of μ_r'-μ_r''
- OSC level characteristics of μ_r'-μ_r''
- Dc bias current characteristics of μ_r'-μ_r''

The setup procedure for each measurement is described in the following pages. Set up your analyzer according the applicable procedure.

7-1. Setting up for $\mu_r' - \mu_r''$ vs. Frequency

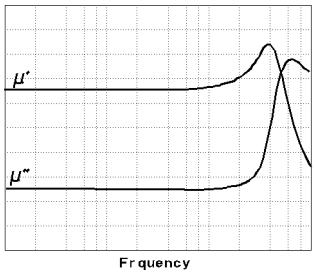

The example setup for this measurement is as follows.

Table 5-2. MEASUREMENT Block Parameter Setting

	Channel 1 Setting	Channel 2 Setting
Parameter	μ_r'	μ_r''
Format	Linear	Linear

Table 5-3. STIMULUS Block Parameter Setting

Sweep Parameter	Frequency
Sweep Type	Log
Frequency Range	1 MHz to 1.8 GHz
OSC Level	500 mV

To set up the analyzer, press the front panel keys as shown in the following procedure:

- MEASUREMENT Block

1. [Meas] [Chan 1] `PRMEABLTY REAL (μr')` (Ch1 Parameter = μ_r')
2. [Meas] [Chan 2] `LOSS FACTR (μr")` (Ch2 Parameter = μ_r'')
3. [Format] [Chan 1] `LIN Y-AXIS` (Ch1 Format = Linear)
4. [Format] [Chan 2] `LIN Y-AXIS` (Ch2 Format = Linear)

- STIMULUS Block

5. [Sweep] `SWEEP MENU SWP SRC: FREQ` (Sweep = Frequency)
6. [Sweep] `SWEEP MENU LOG` (Sweep Type = Log)
7. [Start] [1] [M/μ] (Start = 1 MHz)
8. [Stop] [1] [.] [8] [G/n] (Stop = 1.8 GHz)
9. [Source] `OSC LEVEL` [0] [.] [5] [x1] (OSC Level = 500 mV)

When you want to apply dc bias, refer to “Applying Dc Bias (Option 001 Only)” in Chapter 6.

Jump to “Display Annotations”

7-2. Setting up for μ_r'- μ_r'' vs. OSC Level

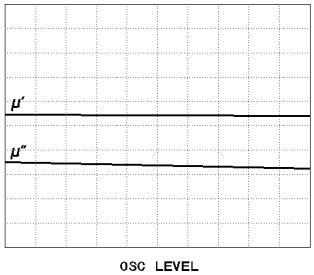

The example setup for this measurement is as follows.

Table 5-4. MEASUREMENT Block Parameter Setting

	Channel 1 Setting	Channel 2 Setting
Parameter	μ_r'	μ_r''
Format	Linear	Linear

Table 5-5. STIMULUS Block Parameter Setting

Sweep Parameter	OSC Level
Sweep Type	Linear
OSC Level Range	200 mV to 500 mV
Source Frequency	100 MHz

To set up the analyzer, press the front panel keys as shown in the following procedure:

- MEASUREMENT Block

1. (Meas) (Chan 1) PRMEABLTY REAL (μ_r') (Ch1 Parameter = μ_r')
2. (Meas) (Chan 2) LOSS FACTR (μ_r'') (Ch2 Parameter = μ_r'')
3. (Format) (Chan 1) LIN Y-AXIS (Ch1 Format = Linear)
4. (Format) (Chan 2) LIN Y-AXIS (Ch2 Format = Linear)

- STIMULUS Block

5. (Sweep) SWEEP MENU OSC LEVEL (Sweep = OSC Level)
6. (Sweep) SWEEP MENU SWP TYPE: LIN (Sweep Type = Linear)
7. (Start) (0) (.) (2) (x1) (Start = 200 mV)
8. (Stop) (0) (.) (5) (x1) (Stop = 500 mV)
9. (Source) CW FREQ (1) (0) (0) (M/μ) (CW Freq. = 100 MHz)

When you want to apply dc bias, refer to “Applying Dc Bias (Option 001 Only)” in Chapter 6.

Jump to “Display Annotations”

7-3. Setting up for $\mu_r' - \mu_r''$ vs. Dc-I (Option 001 only)

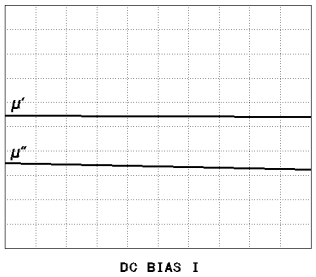

The example setup for this measurement is as follows.

Table 5-6. MEASUREMENT Block Parameter Setting

	Channel 1 Setting	Channel 2 Setting
Parameter	μ_r'	μ_r''
Format	Linear	Linear

Table 5-7. STIMULUS Block Parameter Setting

Sweep Parameter	Dc Bias I
Sweep Type	Linear
dc Bias Range	0 mA to 10 mA
OSC Level	0.5 V
Source Frequency	100 MHz

To set up the analyzer, press the front panel keys as shown in the following procedure:

- MEASUREMENT Block

1. [Meas] [Chan 1] PRMEABLTY REAL (μ_r') (Ch1 Parameter = μ_r')
2. [Meas] [Chan 2] LOSS FACTR (μ_r'') (Ch2 Parameter = μ_r'')
3. [Format] [Chan 1] LIN Y-AXIS (Ch1 Format = Linear)
4. [Format] [Chan 2] LIN Y-AXIS (Ch2 Format = Linear)

- STIMULUS Block

5. [Sweep] SWEEP MENU DC BIAS I (Sweep = Dc Bias I)
6. [Sweep] SWEEP MENU SWP TYPE: LIN (Sweep Type = Linear)
7. [Start] [0] [x1] (Start = 0 mA)
8. [Stop] [1] [0] [k/m] (Stop = 10 mA)
9. [Source] OSC LEVEL [0] [.] [5] [x1] (OSC Level = 500 mV)
10. [Source] CW FREQ [1] [0] [0] [M/μ] (CW Freq. = 100 MHz)
11. [Source] DC BIAS on OFF (Turn ON dc bias)

Display Annotations

The settings that you set in the previous section are displayed on the LCD as annotations. The annotations are described below. Verify that they are set correctly.

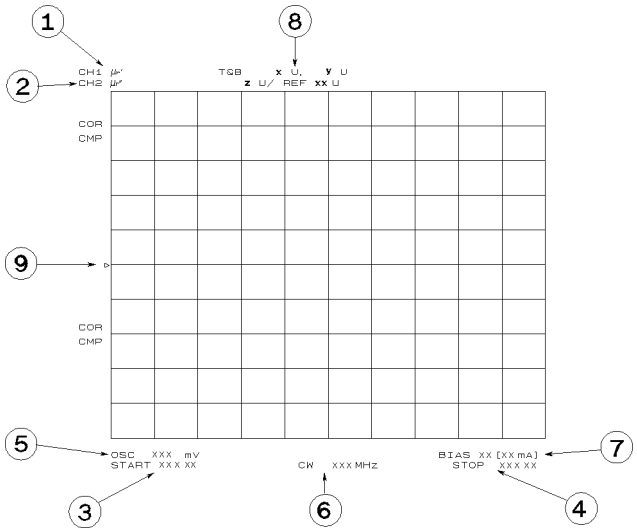

① measurement parameter for channel 1
② measurement parameter for channel 2
③ stimulus start value
④ stimulus stop value
⑤ OSC level value (frequency, dc bias sweep only)
⑥ CW frequency (OSC Level, dc bias sweep only)
⑦ dc bias value (option 001 only)
⑧ grid scale (you do not have set the scale in the previous section).

- `T&B x, y` (for log, linear format)
  The value of the top of grid is `x`.
  The value of the bottom of grid is `y`.
- `z / REF xx` (for linear format)
  The scale/div value is `z`.
  The value of the reference position at which the ▶ ⑨ locates is `xx`.

Note

The analyzer has two channels that provide independent measurement and display of the data. The traces and grids of the two channels are displayed, one over the other. The [Chan 1] and [Chan 2] keys (in the ACTIVE CHANNEL block) select which channel is activated. All the channel specific functions that are selected apply to the active channel. When you want to display the trace of either channel 1 or 2, toggle `DUAL CHAN ON off` to `on OFF` under [Display], and then select [Chan 1] or [Chan 2]

8. Measuring the MUT

After you place the MUT on the test fixture, the measured result is displayed.

Performing Automatic Scaling

Often, the trace obtained after specifying the frequency range is too large or too small vertically for the grid. However, by using the automatic scaling function, you can obtain the optimum vertical setting.

1. Press (Chan 1) to activate channel 1.
2. Press (Scale Ref).
3. Press `AUTO SCALE` to scale the trace of channel 1.
4. Press (Chan 2) to activate channel 2.
5. Press `AUTO SCALE` to scale the trace of channel 2.

If you want to change scale manually, press (Scale Ref) `SCALE/DIV` and turn the rotary knob or input scale value as required.

You will get the measurement results shown on the first page of this chapter.

9. Analyzing a Measurement Result

If you can obtain the correct trace on the display, you can analyze a measurement result by using the marker.

Using the Marker

Marker functions allow you to read out the trace values and the frequency, and also to move to a specific point (for example, the maximum, the minimum, or the peak point). In this procedure, reading a measured value and moving the marker to the maximum point is demonstrated.

Reading a Measured Value

1. Press (Marker).
2. Turn the rotary knob until the marker moves to the point where you want to read the measured value.
3. Read the marker value displayed on the upper right of the display.

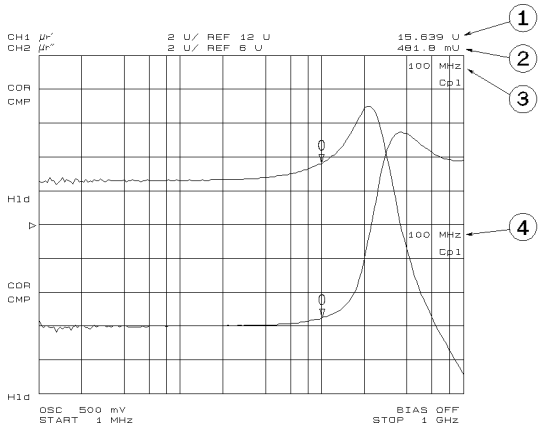

① Marker value for channel 1
② Marker value for channel 2
③ Marker stimulus for channel 1
④ Marker stimulus for channel 2

Note

When the markers are uncoupled by pressing (Marker), `MKR [COUPLED]` to `[UNCOUPLED]`, each marker stimulus is controlled independently.

Moving the Marker to the Maximum Point

1. Press (Chan 1).
2. Press (Search).
3. Press `SEARCH: MAX`
4. The active marker moves to the maximum point on the trace of channel 1
5. Read the marker value displayed on the upper right of the display.

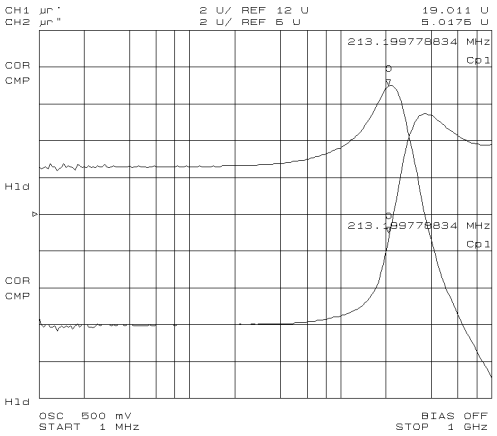

Clearing the Marker

1. Press (Marker).
2. Press PRESET MKRS
3. The marker is cleared.

10. Measuring Other MUTs

If you want to measure other MUTs on different setups, start from "6. Placing the MUT on the Test Fixture". If the next MUT is a different size, start from "5. Input the MUT Size".

For More Information

Chapter 6 provides procedures for the analyzer's key features and measurement technique (for example, averaging, monitoring level, saving/recalling, and printing).

6

Features Common to All Modes

This chapter provides procedures for the analyzer's key features that can be used in all modes of operation (impedance, dielectric, magnetic). The functions are listed below. If you find the function needed for your required task, see the associated section. Also, this chapter provides measurement techniques that help you achieve the best measurement by using the techniques listed below.

- Key Features:
  - Function related measurements:
    - Performing User Defined Calibration
    - Performing User Defined Fixture Compensation
    - Performing Averaging
    - Using Point Delay and Sweep Delay
    - Changing the Number of Measurement Points
    - Applying Dc Bias
    - Monitoring the OSC Level or the Dc Bias Level
    - Performing a GO/NO-GO Test
    - Performing a List Sweep Measurement
    - Constant Current/Voltage Level Measurement
    - Auto Level Control Measurement for OSC Level Sweep
  - Function related displays:
    - Placing Characters on the Screen
    - Splitting the Measurement Display
    - Using the Marker
    - Storing Your Trace to the Memory Traces
    - Using the Trace Math Function
  - Other functions:
    - Saving and Recalling
    - Printing
    - Logging the Key Sequence into a Program
- Measurement Techniques:
  - Smoothing Trace
  - Reducing the Trace Noise
  - Increasing the Sweep Speed
  - When the measurement result seems bad

Performing User Defined Calibration

USER DEFINED calibration reduces the error caused by the interpolation used in a FIXED calibration.

1. Set the analyzer to your required setting.
2. Press (Bw/Avg) (3) (2) (×1) to set point averaging factor to 32. And toggle `POINT AVG OFF` to ON.
3. Press (Cal) `CALIBRATE MENU`.
4. Toggle `CAL POINTS [FIXED]` to `[USER]`.
5. Perform OPEN, SHORT, and LOAD calibration.
6. Perform the low-loss capacitor calibration if required.
7. Press `DONE: CAL`.
8. Verify the following notation is displayed on the left of the screen.

   `Cor` When low-loss capacitor calibration was not performed.

   `C+` When low-loss capacitor calibration was performed.
9. Toggle (Bw/Avg) `POINT AVG ON` to OFF.

Note

When you perform the USER DEFINED calibration, the point averaging factor must be greater than 32 because this is a required condition of the accuracy specification. See the *Operation Manual*.

User Defined Calibration Description

After a FIXED calibration (the default setting), the analyzer can always measure within its specifications. This is true even if you change the stimulus (for example, the frequency and OSC level). Once you perform calibration after power-on, you don't need re-calibration. The analyzer performs the calibration measurements on points fixed across the full sweep range. The effective value for the points between the measured points is calculated using the interpolation method.

On the other hand, after a USER DEFINED calibration, you can measure more accurately. The analyzer performs the calibration measurements on the same points as your current stimulus setting. Therefore, the error caused by interpolation is reduced. In the USER DEFINED calibration, if you change the stimulus, you should calibrate again; two situation are described below. Otherwise, the analyzer may not measure correctly.

- 4291B displays `C?`, `C+?`, `C!` or `C+!`.
- Changing the oscilator level setting; 4291B doesn't have a status notification which relates to this.

About the status notification, see *Operation Manual* chapter 2.

Performing User Defined Fixture Compensation

USER DEFINED fixture compensation reduces the error caused by the interpolation used in a FIXED fixture compensation.

1. Set the analyzer to your required setting.
2. Press (CAL) FIXTURE COMPEN.
3. Press COMPEN MENU.
4. Toggle COMP POINTS [FIXED] to [USER].
5. Perform the required fixture compensation using the FIXED compensation procedure described in the applicable Quick Start chapter.
6. Press DONE: COMPEN.
7. Verify the "Cmp" notation is displayed on the left of the screen.

User Defined Fixture Compensation Description

After a FIXED fixture compensation (the default setting), you can change the stimulus (for example, the frequency and OSC level) as long as you measure the same DUT or a DUT of the same size. The analyzer performs the compensation measurements on points fixed across the full sweep range. The effective value for the points between the measured points is calculated using the interpolation method.

On the other hand, after a USER DEFINED fixture compensation, you can measure more accurately. The analyzer performs the compensation measurements on the same points as your current stimulus setting. Therefore, the error caused by interpolation is reduced. In the USER DEFINED fixture compensation, if you change the stimulus, you should compensate again. Otherwise, the analyzer may not measure correctly.

Note

You cannot select FIXED POINT Compensation, when you have done User Difined calibration.

Performing Averaging

The averaging function reduces the noise. There are two averaging functions, one is point averaging and the other is sweep averaging.

Performing Point Averaging

1. Press (Bw/Avg) POINT AVG FACTOR.
2. Enter the number of times to average. Then press (x1).
3. Toggle POINT AVG on OFF to ON off.

Performing Sweep Averaging

1. Press (Bw/Avg) SWEEP AVG FACTOR.
2. Enter the number of times to average. Then press (x1).
3. Toggle SWEEP AVG on OFF to ON off.

"Avg" appears on the left side of the display when sweep averaging is turned on. The averaging notation counts the averaging factor during averaging until it reaches the specified averaging factor. When averaging is completed, the counter halts and the trace continues updating with each sweep.

Averaging Description

- Sweep Averaging
  Sweep Averaging computes each data point based on an exponential average of consecutive sweeps weighted by a user-specified averaging factor. For a fully averaged trace, each new sweep is averaged into the trace until the total number of sweeps is equal to the averaging factor. This averaging method is same as the averaging of the network analyzer like 8751A.
- Point Averaging
  Point Averaging averages each data point by a user-specified averaging factor. The analyzer repeats measuring the same point until the averaging factor is reached. It then divides the vector summation of measurement values by the averaging factor and starts measuring the next point. This averaging method is same as the averaging of the impedance analyzer like 4194A.

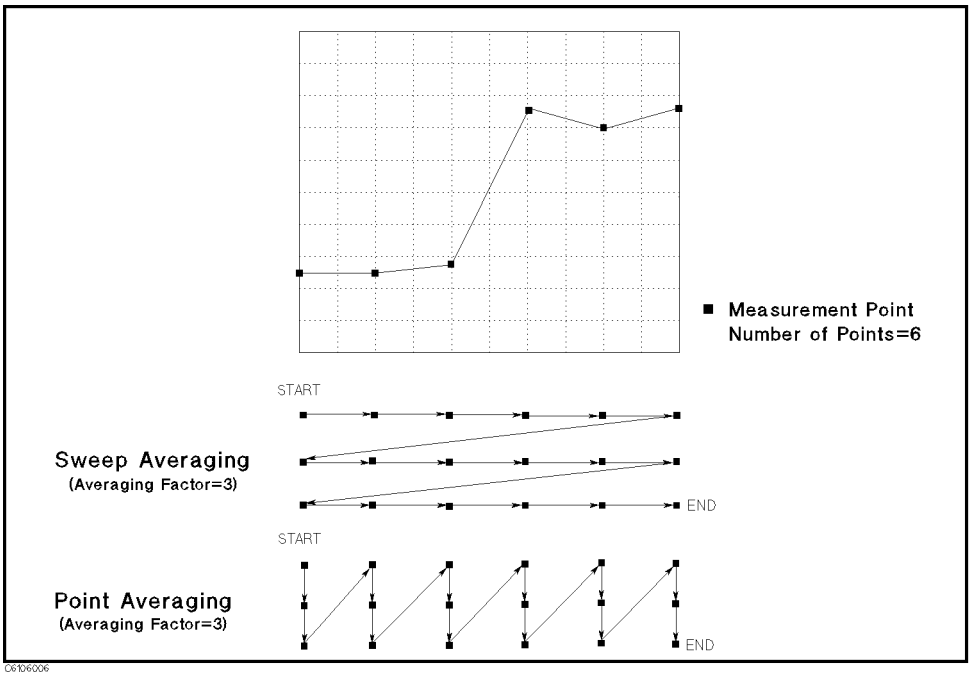

Figure 6-1. Point Averaging and Sweep Averaging

Using Point Delay and Sweep Delay

Delay functions stabilize the measurements by delaying the measurement start for a specified time after the stimulus is set.

Making a Point Delay Measurement

1. Press (Sweep).
2. Press POINT DELAY TIME.
3. Enter the point delay time. Then press (x1).

Making a Sweep Delay Measurement

1. Press (Sweep).
2. Press SWEEP DELAY TIME.
3. Enter the sweep delay time. Then press (x1).

Delay Description

- Point Delay
  The measurement start for each point is delayed for a user-specified time after the stimulus is set at each point.
- Sweep Delay
  The sweep start is delayed for a user-specified delay time after the trigger.

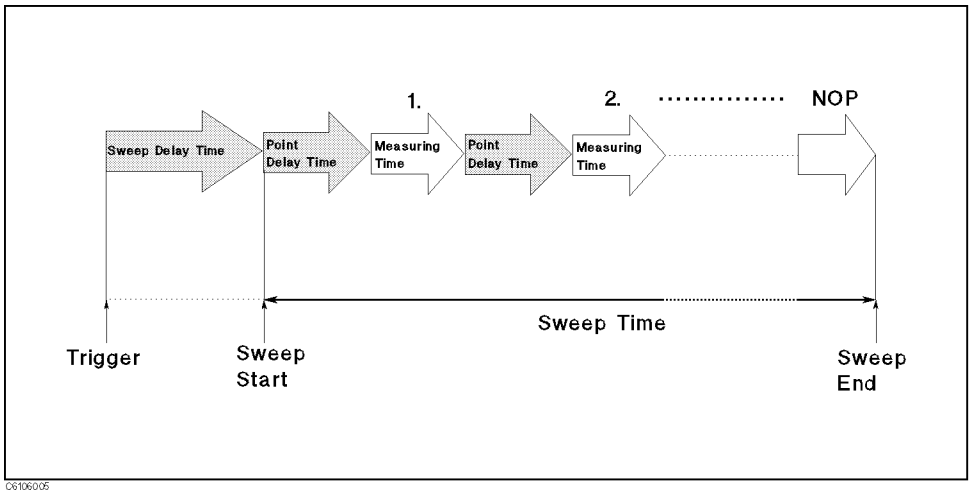

Figure 6-2. Point Delay and Sweep Delay

Changing the Number of Measurement Points

Perform the following steps to change the number of measurement points:

1. Press (Sweep) NUMBER of POINTS.
2. Enter the number of measurement points. Then press (x1).

Number of Measurement Points Description

NUMBER of POINTS sets the number of measurement points in a sweep. Using fewer points allows a faster sweep time but the displayed trace shows less horizontal detail. Using more points gives greater data density and improved trace resolution, but slows the sweep.

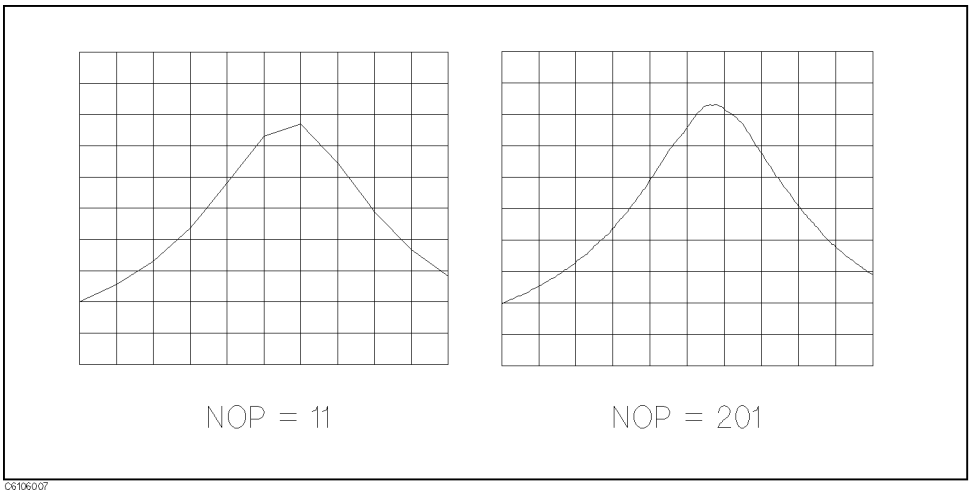

Figure 6-3. Number of Points

Applying Dc Bias (Option 001 Only)

When the analyzer is equipped with Option 001, ±40 V or ±100 mA can be applied to the DUT. If you want to apply dc bias to the DUT, perform the following procedure:

1. Press (Source) DC BIAS MENU.
2. Select BIAS SRC.
   - Voltage Setting Mode:
     a. Press BIAS VOLTAGE.
     b. Enter the desired dc bias voltage value.
     c. Press BIAS CUR LIMIT.
     d. Enter the desired current limit value.
   - Current Setting Mode:
     a. Press BIAS CURRENT.

b. Enter the desired dc bias current value.

c. Press BIAS VOLT LIMIT.

d. Enter the desired voltage limit value.

3. Press RETURN.

4. Toggle DC BIAS on OFF to DC BIAS ON off.

5. Verify that the DC BIAS ON message is displayed.

If the voltage or the current reaches the limit value, the analyzer limits the source output. In that case, the "↓V" or "↓I" notation is displayed on the left of the screen.

Note

The dc bias must be set after compensation. This is necessary because the dc bias is automatically turned off when performing calibration or compensation.

Monitoring the OSC Level or the Dc Bias Level

The level monitor function allows you to monitor the voltage across the DUT or the current through the DUT.

1. Select the channel on which you want to monitor the source level by pressing (Chan 1) or (Chan 2).
2. Press (Utility).
3. Press LEVEL MON [OFF].
4. Select the parameter that you want to monitor.
   - AC-V
   - AC-I
   - DC-V (Option 001 only)
   - DC-I (Option 001 only)
5. Move the marker to your required stimulus position.
6. The level at the marker is displayed on the right of the display.

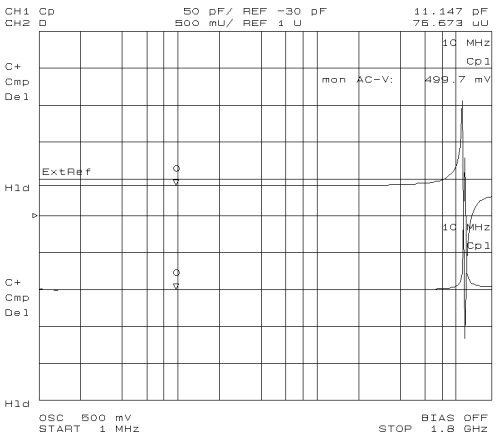

Figure 6-4. Level Monitor Function

Performing a GO/NO-GO Test

The limit line/testing function allows you to perform GO/NO-GO testing. The limit lines define the upper and lower limits. The limit testing function compares the measured data to the limit lines and indicates the result.

Editing a Limit Line Table

This procedure edits a limit line table to match the example that is shown in Figure 6-5.

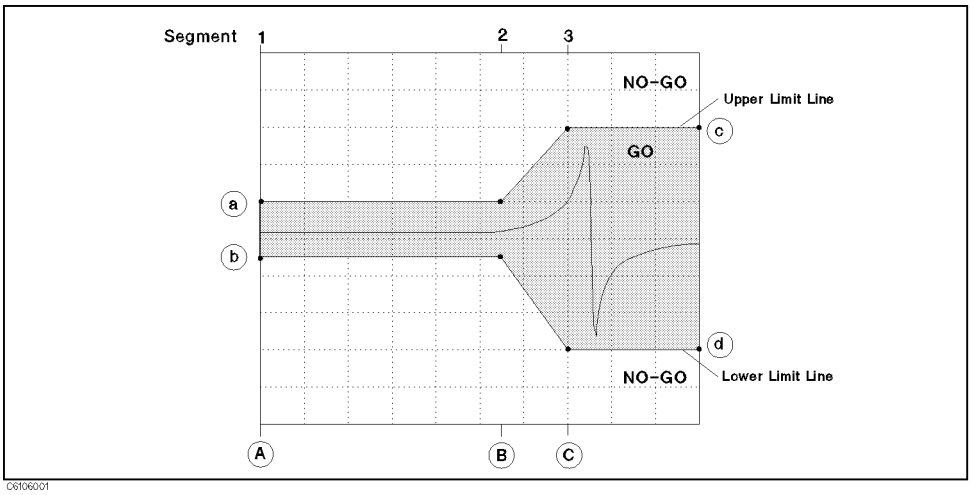

Figure 6-5. Limit Line Example

1. Select the channel on which you want to perform the limit test by pressing (Chan 1) or (Chan 2).
2. Press (System) `LIMIT MENU`.
3. Toggle `LIMIT LINE on OFF` to `ON off`.
4. Press `EDIT LIMIT LINE` `EDIT`.

5. For segment 1:

   Press STIMULUS VALUE.

   Enter stimulus value Ⓐ.

   Press UPPER LIMIT.

   Enter value of ⓐ.

   Press LOWER LIMIT.

   Enter value of ⓑ.

   Press DONE to end editing the segment.

6. For segment 2:

   Press ADD to edit the new segment.

   Press STIMULUS VALUE.

   Enter stimulus value Ⓑ.

   Press UPPER LIMIT.

   Enter value of ⓐ.

   Press LOWER LIMIT.

   Enter value of ⓑ.

   Press DONE to end editing the segment.

7. For segment 3:

   Press ADD to edit the new segment.

   Press STIMULUS VALUE.

   Enter stimulus value Ⓒ.

   Press UPPER LIMIT.

   Enter value of ⓒ.

   Press LOWER LIMIT.

   Enter value of ⓓ.

   Press DONE to end editing the segment.

8. Press DONE to end editing the limit line table.

Executing a Limit Line Test

1. Press (System) LIMIT MENU.
2. Toggle LIMIT TEST on OFF to ON off.

When limit testing is turned on, an out-of-limit test result is indicated in five ways:

- With a FAIL message on the screen.
- With a beep (on/off selectable).
- With an asterisk in tabular listings of data (under (Copy)).
- With bits 3 and 4 of the instrument status register in the status register.
- With the GPIB commands :DATA? LFA,:DATA? LLIS,:DATA? LMAR.

Performing a List Sweep Measurement

The list sweep function allows you to sweep the frequency according to a predefined sweep segment list. Each sweep segment is independent and can have a different number of sweep points, OSC level, and point averaging. The list sweep is used to reduce the sweep time by setting coarse sweep points for the flat portion of wave form and fine sweep points for the sharply curved portion of the wave form.

Editing a Sweep List

This procedure edits a list sweep table to match the example that is shown in Figure 6-6.

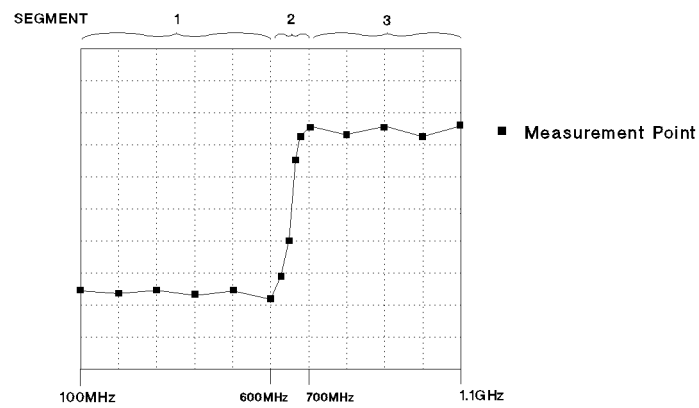

SEGMENT	START	STOP	POINTS	OSC	AVG
1	100MHz	600MHz	6	500mV	1
2	600MHz	700MHz	6	500mV	1
3	700MHz	1.1GHz	5	500mV	1

C6106002

Figure 6-6. List Sweep Example

1. Press (Sweep) LIST MENU EDIT LIST EDIT.
2. For segment 1:

   Press (Start) (1) (0) (0) (M/μ).

   Press (Stop) (6) (0) (0) (M/μ).

   Press NUMBER of POINTS (6) (x1) SEGMENT DONE.
3. For segment 2:

   Press ADD.

   Press (Start) (6) (0) (0) (M/μ).

   Press (Stop) (7) (0) (0) (M/μ).

   Press NUMBER of POINTS (6) (x1) SEGMENT DONE.
4. For segment 3:

   Press ADD.

   Press (Start) (7) (0) (0) (M/μ).

   Press (Stop) (1) (.) (1) (G/n).

   Press NUMBER of POINTS (5) (x1) SEGMENT DONE.
5. Press LIST DONE.

Activating a List Sweep

Press (Sweep) SWEEP MENU SWP TYPE: LIST to perform the list sweep measurement.

Constant Current/Voltage Level Measurement

The furnished sample program disk (Agilent PN 04291-18000) includes the Auto Level Control program (ALC) for frequency sweep. This program allows you to make a measurement that has a regulated OSC level voltage or current. This means that the actual OSC level applied to the DUT is equal to the value you set. After you set the analyzer to the required setting, execute the program. The program monitors and regulates the OSC level, and then measures the DUT at each measurement point that is defined by the number of points. After measuring all the measurement points, the result is displayed and the program ends. The program does not allow the OSC level sweep or the dc bias sweep.

1. Insert the sample program disk into the floppy disk drive.
2. Press (Display) DISPLAY ALLOCATION BASIC STATUS and type GET "ALC" and then press (Return).
3. Set the analyzer to the required setting.
4. Type RUN and then press (Return).
5. Select which voltage or current regulation by enter the number according to instructions. Then press (x1).

6. Enter the required value in volts or amps, then press (x1). (Do not use the hard key for units, (k/m) (M/μ) (G/n))
7. The stimulus is changed from one to another measurement points that is defined by the number of points. It takes few seconds per one point.
8. After the measurement is completed, the message "complete" is displayed.
9. The measurement result is displayed on the data trace and the actual OSC level that was applied to the DUT is displayed on the memory trace.

If the "over flow" message is displayed after the measurement is finished, it means that the analyzer could not regulate the OSC level to your setting value at some frequency. If you want to read the actual applied OSC level, perform the following procedure.

1. Press (Marker).
2. Toggle `MKR ON [DATA]` to `[MEMORY]`.
3. Move the marker to your required stimulus position.
4. Read the marker value on the upper right of screen. When you read the value, replace the displayed unit (example Ω, F, or H) with "V" for voltage setting, or "A" for current setting.

Note

While the program is running, the number of points is set to 2. If you abort the program, set the number of points to your required number.

Auto Level Control Measurement for OSC Level Sweep

The furnished sample program disk (Agilent PN 04291-18000) includes the Auto Level Control program (`ACI`) for OSC level sweep. This allows you to make a measurement that the actual OSC level applied to the DUT is equal to the value you set. After you set the analyzer to the required setting, execute the program. The program sweeps the OSC level which you set and monitor the actual OSC level applied to the DUT, and calculate the start/stop value of OSC level, then the result is displayed and the program ends.

If the "over flow" message is displayed after the measurement is finished, it means that the analyzer could not regulate the OSC level to your setting value.

1. Insert the sample program disk into the floppy disk drive.
2. Press (Display) `DISPLAY ALLOCATION` `BASIC STATUS` and type `GET "ACI"` and then press (Return).
3. Press (Sweep) `SWEEP MENU` `OSC LEVEL`.
4. Set the analyzer to the required setting.
5. Type `RUN` and then press (Return).

6. Select which voltage or current regulation by enter the number according to instructions. Then press (x1).
7. Enter the required stimulus start value in volts or amps, then press (x1). (Do not use the hard key for units, (k/m) (M/μ) (G/n))
8. Enter the required stimulus stop value in volts or amps, then press (x1).
9. After the tens-seconds measurement is completed, the message "complete" is displayed.
10. The measurement result of channel 1 is displayed on the User Trace 1 and the meausrement result of channel 2 is displayed on the User Trace 2.
11. Press (Marker) to display the marker.
12. When you want to move the marker to another trace, press (Display) DEFINE TRACE SELECT UTRC [] and select required user trace number.
13. When you want to switch the user trace to the measurement trace (data trace), toggle TRACE [USER] to [DATA&MEM] under (Display) MORE.

Placing Characters on the Screen

The label function allows you to place any characters that the analyzer provides, anyplace on the screen.

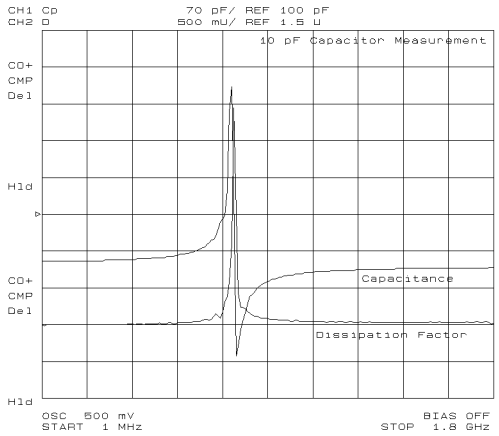

Figure 6-7. Label Function

Placing Letters on the Screen

1. Press (Display) MORE LABEL MENU.
2. Press LABEL NUMBER.
3. Select a label number (0 to 19) that has not been entered yet.
4. Press LABEL.
5. Enter the label name:
   - Turn the rotary knob to move the arrow "↑" below the character that you want.
   - Press SELECT LETTER.
   - Keep entering characters in the same manner.
   - Press DONE when you have finished entering characters.
     - Three sets of letters can be scrolled using the step keys, (⇧) and (⇩).
     - You can entry the characters using with the keyboard.
6. Press X POS.
7. Enter the numeric or turn the rotary knob to locate the label horizontally.
8. Press Y POS.
9. Turn the rotary knob or enter the numeric to locate the label vertically.
10. If you want to change the color of the label, press COLOR and select a color number from 0 to 5. Then, press (x1).
11. Press RETURN.

Editing the Label and Changing the Position or Color

1. Press (Display) MORE LABEL MENU.
2. Press LABEL NUMBER.
3. Select the label number that you want to change.
4. Press LABEL.
5. Change the label.
6. Press X POS or Y POS if you want to change the position.
7. Turn the rotary knob to change the position.
8. Press COLOR.
9. Select a color number to change the color. Then press (x1).
10. Press RETURN.

Splitting the Measurement Display

The split display function allows you to split the display using two half screen graticules (one above the other).

1. Press (Display)
2. Verify `DUAL CHAN` is ON.
3. Toggle `SPLIT DISP on OFF` to `ON off`.

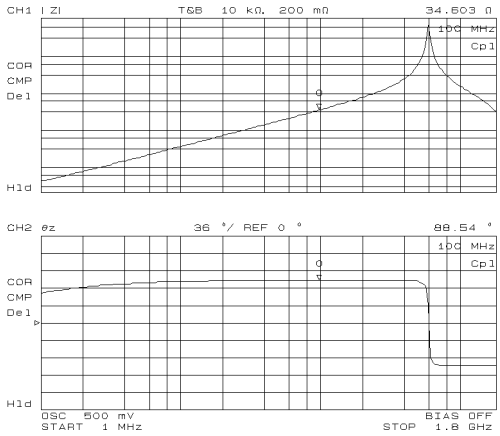

Figure 6-8. Split Display

Performing Independent Sweeps for Each Channel

The sweep parameter values can be uncoupled between the two channels. Each channel can be set to independently sweep parameters.

1. Press (Sweep).
2. Toggle `COUPLED CH ON off` to `on OFF`.

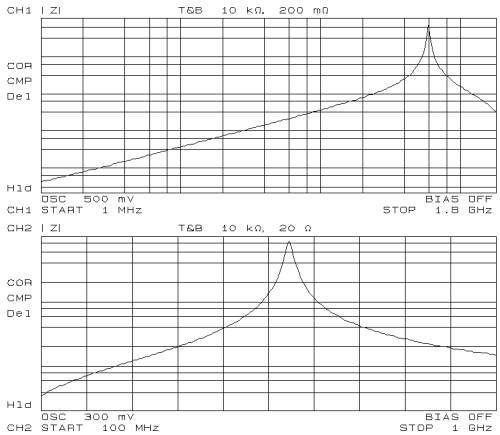

Figure 6-9. Uncoupled Channels

Using the Marker

The marker function allows you to read a value at the marker, to read values at several points on the trace, or to search for specific points (like max/min or peak).

Reading a Value Using the Marker

1. Press (Marker).
2. The active marker is displayed on the traces.
3. Move the marker by performing one of the following steps:
   - Turn the rotary knob until the marker moves to the point where you want to read the measured value.
   - Enter the target stimulus by using numerical keys.
4. Read the marker value displayed on the upper right of the display.

Reading Values by Using the Sub-markers

1. Press (Marker).
2. Move the active marker to a point where you want to set a sub-marker.
3. Press `SUB MKR`.
4. Select from `SUB MKR 1` to `7`.
5. Press (Utility).
6. Toggle `MKR LIST on OFF` to `ON off`.

The sub-marker appears at the point at which the marker was displayed. Sub-markers are fixed horizontally and you cannot move them.

The sub-marker value can only be displayed by using the marker list.

To clear a sub-marker, press (Marker) `CLEAR SUB MKR`. Then press the sub-marker number that you want to erase from the display.

To clear all the markers, press (Marker) `PRESET MKRS`.

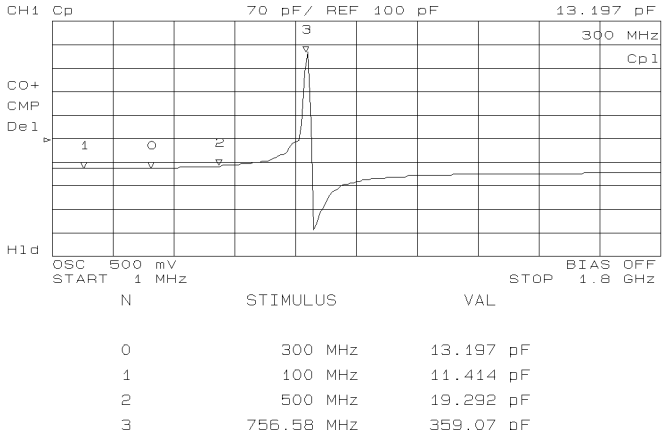

Figure 6-10. Marker List

Searching for a Specific Point

Searching for Maximum/Minimum Points

1. Select the channel of the trace on which you want to search for a specific point by pressing (Chan 1) or (Chan 2).
2. Press (Search).
3. Do one of the following:

To	Press
Search for maximum point	SEARCH: MAX
Search for minimum point	MIN

4. The active marker moves to the target point on the trace of the activated channel.

Searching for Points that Have the Target Value

1. Select the channel of the trace on which you want to search for specific points by pressing (Chan 1) or (Chan 2).
2. Press (Search).
3. Press TARGET.
4. Enter the target value. Then press the unit termination key ((G/n), (M/μ), (k/m), or (x1)).
5. The active marker moves to a point that has the target value.

To search for a target point to the	Press
Left side of the active marker	SEARCH LEFT
Right side of the active marker	SEARCH RIGHT

Storing Your Trace to the Memory Traces

The trace memory function allows you to store your trace to the memory traces.

Storing the Data Trace to the Memory Trace

1. Press (Display).
2. Press DEFINE TRACE.
3. Press DATA → MEMORY.

Storing More Traces to Memory Traces

1. Press (Display).
2. Press DEFINE TRACE.

3. Press SELECT MEMORY NUMBER.
4. Press (⇧) to select the number of a memory trace into which a trace has not been stored.
5. Press DATA → MEMORY to store the data trace into the selected memory trace.

Displaying Memory Traces

1. Press (Display).
2. Press DEFINE TRACE.
3. Do one of the following:

To	Press
Display all memory traces	MEMORY
Display all memory traces and data traces	DATA and MEMORY

4. Press SELECT MEMORY NO.
5. Enter the memory trace number that you want to display. Then, press (x1).
6. The selected memory trace is highlighted.

Displaying a Memory Trace Only When It Is Selected.

If the SEL'D MEM ON off is toggled to on OFF, the memory trace is displayed only when it is selected.

When the (Display) DISPLAY ALLOCATION GRAPHICS: IBASIC DRAW is selected, only the selected memory trace is displayed. If you want to display all memory traces, press (Display) DISPLAY ALLOCATION ALL MEMORY TRACE.

Clearing the Memory Traces

1. Press (Display).
2. Press DEFINE TRACE.
3. Press CLEAR MEMORIES.
4. All memory traces are cleared.

Using the Trace Math Function

The trace math function allows you to calculate functions using the data trace and the memory trace.

Calculating Using the Data Trace and Memory Trace

1. Press (Display) `DATA MATH [DATA]`.
2. Do one of the following:

To	Press
Add Trace with Memory Trace	`DATA+MEM`
Subtract Trace with Memory Trace	`DATA-MEM`
Divide Trace with Memory Trace	`DATA/MEM`

Turning Off the Data Math Function

Press (Display) `DATA MATH []` `DATA MATH: DATA` to turn off the data math function.

Saving and Recalling

The save/recall functions allow you to save and recall an analyzer setting, measurement data, or display image.

The analyzer has two kinds of mass storage, a floppy disk drive and a memory disk. Each mass storage supports two kinds of format, LIF (Logical Interchange Format) and MS-DOS®. The analyzer automatically detects the disk format as either LIF or MS-DOS®.

Caution

The memory disk can keep data until the analyzer is turned off. So you should make backup data like below.

1. Press (SAVE) key.
2. Press `BACK UP MEMO DISK` soft key.

To recover the backup data, two ways are available for 4291B.

- Turn 4291B off then on. Then prodno; gets the backup data automatically.
- Using the Instrument BASIC function, send `RESTMDISK` GPIB command to the analyzer like below.

```
OUTPUT 800;"RESTMDISK"
```

Remember you will lose the present data in the memory disk, once you do these operations above.

Saving an Analyzer Setting and Measurement Trace

You can save an analyzer setting and measurement trace by performing the following procedure. Not only the key setting but also calibatrion data and compensation data are saved into the status files.

1. Insert a LIF or MS-DOS® formatted 3.5 inch disk into the floppy disk drive (if you are saving an instrument state file to the memory disk, skip this step).
2. Press (Trigger) `SWEEP: HOLD` to hold a sweep, if you want to save a measurement trace.
3. Press (Save).
4. Select where the file is to be stored by pressing either
   `STOR DEV [DISK]` (for the floppy disk drive) or
   `STOR DEV [MEMORY]` (for the memory disk).
5. Press `STATE`.
6. Enter a filename. Then press `DONE`.

Recalling a Saved Analyzer Setting and Measurement Trace

1. Insert the appropriate disk (if you are recalling an instrument state file from the memory disk, skip this step).
2. Press (Recall).
3. Select where the file is stored by pressing either
   `STOR DEV [DISK]` (for a floppy disk drive) or
   `STOR DEV [MEMORY]` (for a memory disk).
4. Search for the filename you want to recall (the files are listed on the softkey labels).
5. If a target file is not listed on a softkey label, select different labels by pressing `PREV FILES` or `NEXT FILES`.
6. Press the softkey corresponding to the filename label.

Note

You can automatically recall the instrument state every time the analyzer is turned ON. Use "`AUTOREC`" as a filename. When the analyzer is turned ON, it recalls this file from a disk that is in the floppy disk drive or from backup data of memory disk.

Saving a Display Image to a TIFF File

1. Press (Save) key.
2. Press `GRAPHICS`.
3. Select where to store the file by pressing either `STOR DEV [DISK]` (for a floppy disk drive) or `STOR DEV [MEMORY]` (for a memory disk).
4. Enter filename. Then press `DONE`.

The analyzer saves an TIFF file with an "`.TIF`" extension for a DOS format, or a "`_T`" suffix for a LIF format.

Saving Measured Data for a Spreadsheet

1. Insert a DOS format disk into the floppy disk drive.
2. Press (Save) key.
3. Press DATA ONLY and SAVE ASCII.
4. Select the floppy disk drive as the storage device by toggling to STOR DEV [DISK].
5. Enter a filename. Then press DONE.

The measured data is saved as ASCII text. Each value is separated by a tab. When you open this file from the spreadsheet software, specify the file format as the "TEXT with TAB delimiter".

Purging a File

If there is a file on the disk that has the same name you entered when saving a file, the error message, "filename error" is displayed. To save the file, you must use another filename or purge the old file. To purge a file, press (Save) FILE UTILITIES PURGE FILE then select the displayed filename by pressing the associated softkey.

Initializing a Disk/Memory Disk for Use

1. Insert a disk that is not write protected (if you are initializing the memory disk, skip this step).
2. Press (Save) FILE UTILITIES.
3. Select the disk format (either DOS or LIF) by toggling FORMAT [DOS] or [LIF].
4. Select the initialized storage device by toggling STOR DEV [DISK] or [MEMORY].
5. Press INITIALIZE.
6. Press INITIALIZE DISK: YES to initialize the memory disk or the disk.

Printing

Printing a Display Image

1. Connect a printer to the analyzer.
2. Press (Copy) PRINT [STANDARD] to print.

To stop printing in progress, press (Copy) COPY ABORT.

Logging the Key Sequence into a Program

The logging function allows you to log your key sequence into an instrument BASIC program. This function allows you to create a program without referring to the *Programming Manual*.

1. Press System.
2. Toggle `LOGGING on OFF` to `ON off`.
3. Press the front panel keys according to your required setting.
4. Press System.
5. Toggle `LOGGING ON off` to `on OFF`.
6. Press `IBASIC EDIT` to enter the edit mode.
7. Verify that the program was created according to your key sequence.

Note

When you log the calibration and the fixture compensation procedure, you must modify the program to wait for completion of the calibration or the fixture compensation. See chapter 2 of the *Programming Manual*.

Measurement Techniques

This section provides additional measurement techniques that help you achieve the best measurement results.

Smoothing the Trace

When the measurement trace is not smooth, the following procedure can provide a smoother trace:

1. Set the point averaging factor to more than 32.
2. Set the number of measurement points to a large value.
3. Perform the user defined calibration.
4. Perform the user defined fixture compensation.
5. Measure your DUT (or MUT).

Note

You can set the point averaging factor to less than 32 after the fixture compensation, if you want to reduce the sweep time:

Reducing Trace Noise

When the measurement is noisy or not stabilized, the following procedure can reduce the noise:

1. Set the averaging factor (point averaging and sweep averaging) to a large value.
2. Perform a delayed measurement (point delay and sweep delay).
3. Measure your DUT (or MUT).

Increasing the Sweep Speed

When you want to increase the sweep speed, the following actions help reduce the sweep time.

- Reduce the number of measurement points.
- Use list sweep.

When the Measurement Result Does Not Seem Correct

When the measurement result does not seem correct, verify whether the calibration was performed correctly (because the calibration defines the measurement accuracy). Also if you performed the fixture compensation, you should verify the fixture compensation. The verification procedures are described below.

Calibration Verification

- Calibration without low-loss capacitor
  1. Connect 50 Ω termination to the test head.
  2. Press (Meas) FIXTURE NONE.
  3. Press (Chan 1) (Meas) IMPEDANCE: MAG (|Z|).
  4. Press (Scale Ref) AUTO SCALE.
  5. Press (Chan 2) (Meas) PHASE (θz).
  6. Press (Scale Ref) AUTO SCALE.

7. Verify the measurement trace of |Z| is within 50 Ω ±250 mΩ during the entire sweep.
8. Verify the measurement trace of θz is within ±5 mrad (0.29°) during the entire sweep.

■ Calibration with low-loss capacitor

1. Connect 50 Ω termination to the test head.
2. Verify that all of OPEN/SHORT/LOAD fixture compensations under (Cal) FIXTURE COMPEN are OFF.
3. Press (Meas) FIXTURE NONE
4. Press (Chan 1) (Meas) IMPEDANCE: MAG (|Z|).
5. Press (Scale Ref) AUTO SCALE.
6. Verify the measurement trace of |Z| is within 50 Ω ±250 mΩ during the entire sweep.
7. Connect low-loss capacitor to the test head.
8. Press (Chan 1) (Meas) D FACTOR (D).
9. Press (Scale Ref) AUTO SCALE.
10. Verify the measurement trace of D is within ±5 m above 100 MHz.

Note

The 0 S termination has a capacitance of 82 fF. Therefore, if you measure the 0 S termination after calibration, approximately 927 μS is observed at 1.8 GHz.

OPEN Compensation Verification (Impedance Measurement Only)

1. Set the test fixture to the open condition.
2. Verify the fixture model number under (Meas) was set correctly for your measurement.
3. Verify that OPEN fixture compensation under (Cal) FIXTURE COMPEN is ON.
4. Press (Chan 1) (Meas) CONDUCT (G).
5. Press (Scale Ref) AUTO SCALE.
6. Press (Chan 2) (Meas) CAPACITNCE: PRL(Cp).
7. Press (Scale Ref) AUTO SCALE.
8. Verify the measurement trace of G is within approximately ±50 μS during the entire sweep.
9. Verify the measurement trace of Cp is within approximately ±200 fF during the entire sweep.

SHORT Compensation Verification (Impedance Measurement Only)

1. Set the test fixture to the short condition.
2. Verify the fixture model number under (Meas) was set correctly for your measurement.
3. Verify that SHORT fixture compensation under (Cal) `FIXTURE COMPEN` is ON.
4. Press (Chan 1) (Meas) `RESIST (R)`.
5. Press (Scale Ref) `AUTO SCALE`.
6. Press (Chan 2) (Meas) `INDUCTNCE: SER (Ls)`.
7. Press (Scale Ref) `AUTO SCALE`.
8. Verify the measurement trace of R is within approximately ±200 mΩ during the entire sweep.
9. Verify the measurement trace of Ls is within approximately ±150 pH during the entire sweep.

A

Manual Changes

Introduction

This appendix contains the information required to adapt this manual to earlier versions or configurations of the analyzer than the current printing date of this manual. The information in this manual applies directly to the 4291B RF Impedance/Material Analyzer serial number prefix listed on the title page of this manual.

Manual Changes

To adapt this manual to your 4291B, see Table A-1 and Table A-2, and make all the manual changes listed opposite your instrument's serial number and firmware version.

Instruments manufactured after the printing of this manual may be different from those documented in this manual. Later instrument versions will be documented in a manual changes supplement that will accompany the manual shipped with that instrument. If your instrument's serial number is not listed on the title page of this manual or in Table A-1, it may be documented in a *yellow MANUAL CHANGES* supplement.

In additions to change information, the supplement may contain information for correcting errors (Errata) in the manual. To keep this manual as current and accurate as possible, Agilent Technologies recommends that you periodically request the latest *MANUAL CHANGES* supplement.

For information concerning serial number prefixes not listed on the title page or in the *MANUAL CHANGE* supplement, contact the nearest Agilent Technologies office.

Turn on the line switch or execute the `*IDN?` command by GPIB to confirm the firmware version. See the *GPIB Command Reference* manual for information on the `*IDN?` command.

Table A-1. Manual Changes by Serial Number

Serial Prefix or Number	Make Manual Changes

Table A-2. Manual Changes by Firmware Version

Version	Make Manual Changes

Serial Number

Agilent Technologies uses a two-part, ten-character serial number that is stamped on the serial number plate (see Figure A-1) attached to the rear panel. The first five characters are the serial prefix and the last five digits are the suffix.

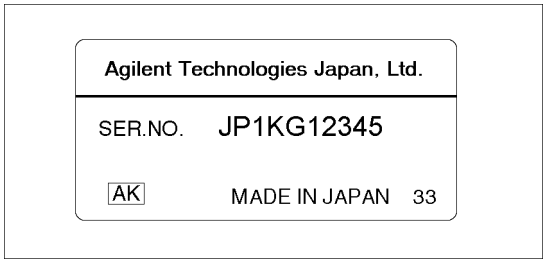

Figure A-1. Serial Number Plate

B

Maintenance

This appendix provides information on performance verification, repair, replacement of Center Conductor Collet, line voltage setting changes, and fuse replacement.

Performance Verification

The 4291B requires periodic performance verification. How often you verify performance depends on the operating and environmental conditions. The recommended cycle is at least once a year. The performance verification procedure is described in the *Service Manual*. For the customer who does not have the test instruments required for performance verification or who wants to save time, Agilent Technologies provides calibration service. For detailed information, contact the nearest Agilent Technologies office.

Repair

When your analyzer seems defective, the following section of "Possible Problems and Their Solution" will help you to determine what to do. If you can not find a solution, contact the nearest Agilent Technologies office. If you send the instrument to HP, include information about the trouble symptom. Send all of your analyzer, including the mainframe, test station, test head and calibration kit (0 Ω, 0 S, 50 Ω terminations and low-loss capacitor).

Possible Problems and Their Solution

- Analyzer does not turn on:

  Check the fuse and the voltage selected.

- Measurement trace is not stable:

  1. Check the test station, the test head, and the fixture connection.
  2. Check the center conductor collet of the APC-7 connector on the test head, the 50 Ω termination, and the low-loss capacitor. If a collet is defective, replace it (see "Replacement of Center Conductor Collet").

- Measurement trace is displayed as a line or is not smooth:

  The number of measurement points may be too small.

- Nothing is displayed on the screen or only the softkey labels are displayed.

  The display allocation may set to all BASIC.

- Recalling a status file, but the calibration data isn't recalled (`COR` is not displayed.)

  The different kind of test head may be connected.

Replacement of Center Conductor Collet

The replacement procedure for the center conductor collet on the APC-7® is described in below:

Required Item	Agilent Part Number
Collet Removal Tool	5060-0236
6-Slot Precision Collet	85050-20001
Removing Tool Guide (for low-loss capacitor)	04291-21002

Note

Removing Tool Guide (Agilent P/N 04291-21002) is furnished with the low-loss capacitor as the end cap.

Removing Center Conductor Collets

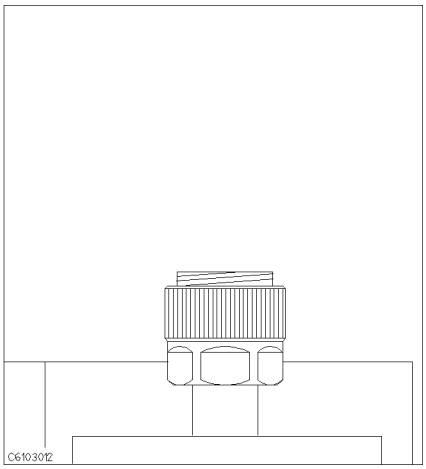

1. Verify that the connector sleeve is extended fully.

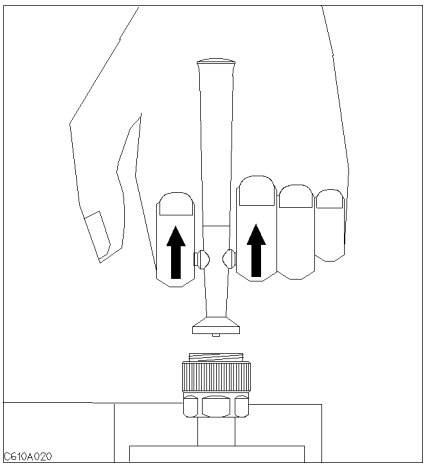

2. Pull back the handle of the collet removing tool.

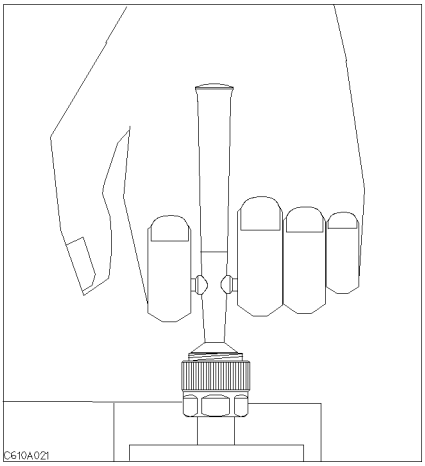

3. Keep the handle pulled back and insert the tool into the connector until it comes to rest lightly on the interior support bead.

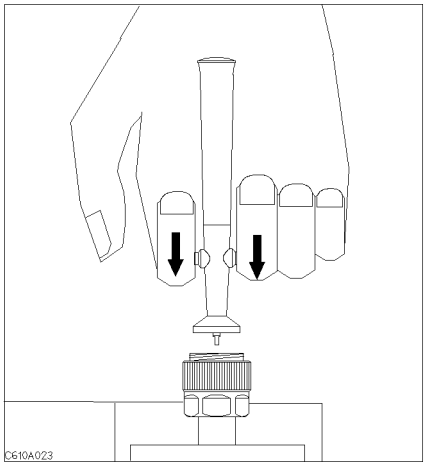

4. Release the handle and remove the old collet and the tool.

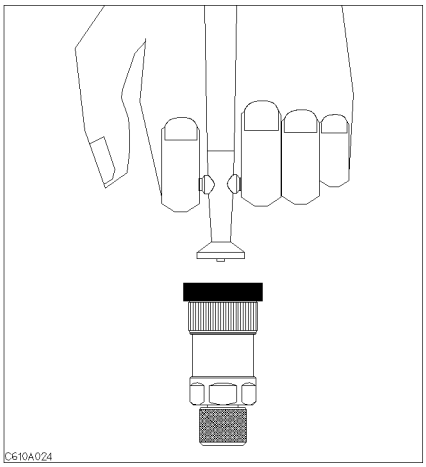

The low-loss capacitor has no extending connecter sleeve. Use the Removing Tool Guide instead of extending connector sleeve.

Insert Center Conductor Collets

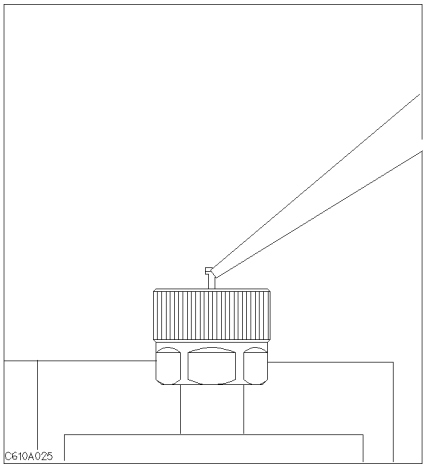

1. Place the collet on the center conductor of the connector.

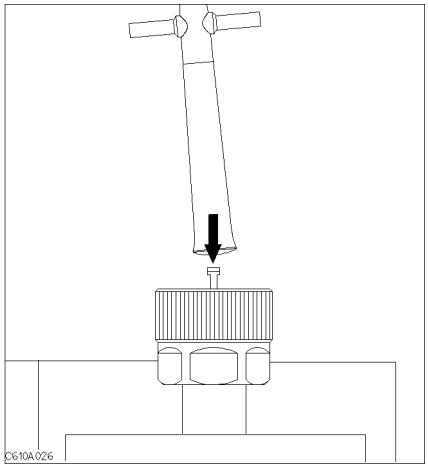

2. Press the collet gently until it snaps into place.

C

Fixture Compensation Procedures for the 16191A and 16193A

This appendix provides fixture compensation procedures for the 16191A and 16193A. A fixture compensation procedure for the 16192A is described in the “5. Fixture Compensation” in Chapter 3.

16191A

SHORT Compensation

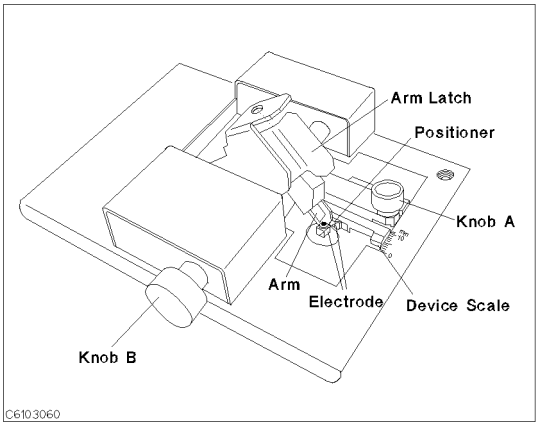

The names of each part are listed above.

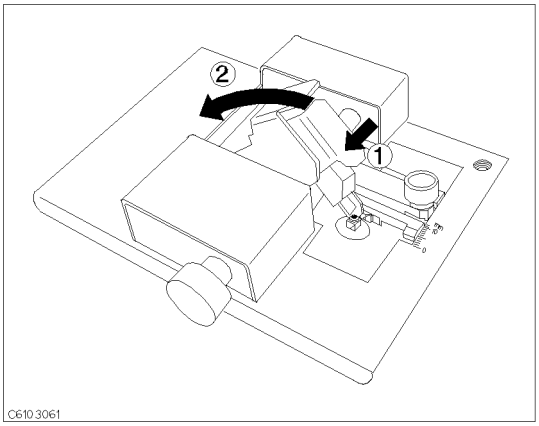

1. ① Latch off the arm latch. ② Hold up the pressure arm.

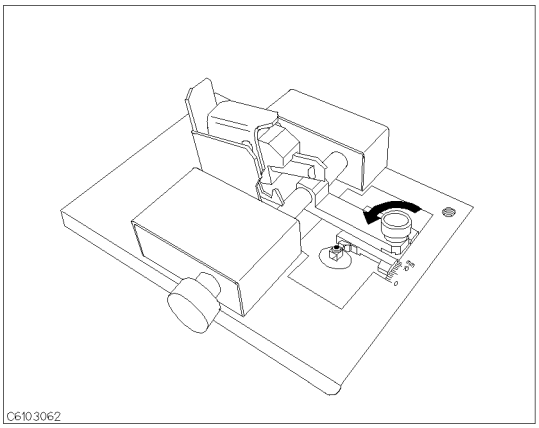

2. Loosen knob A

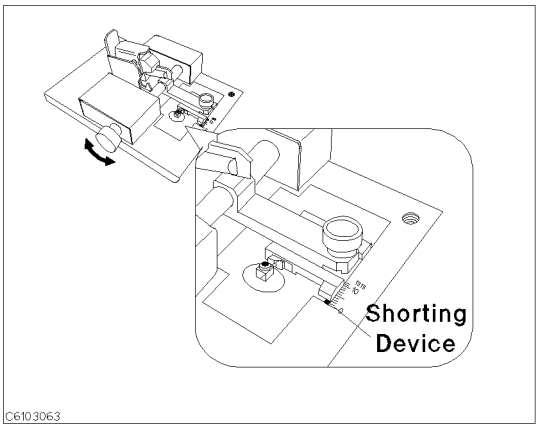

3. Adjust knob B to fit the shorting device to the device scale.

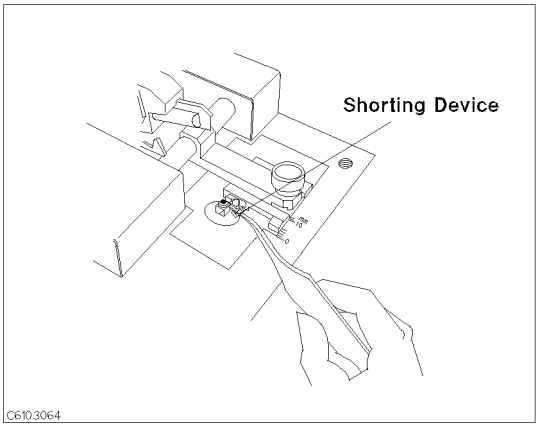

4. Place the shorting device on the electrode and turn knob B for fine adjustment.

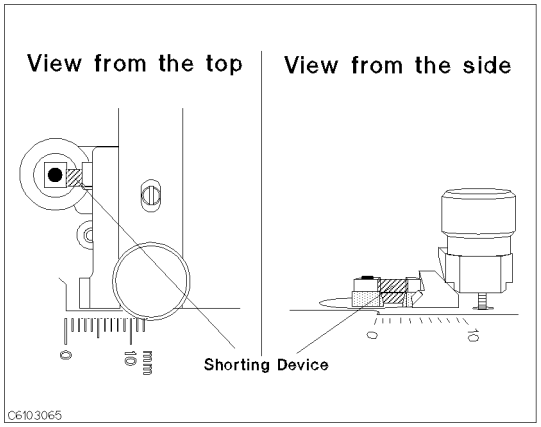

5. Verify that the shorting device contacts the electrodes securely.

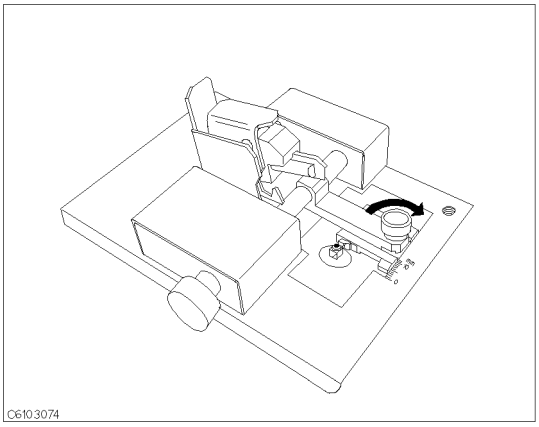

6. Tighten knob A.

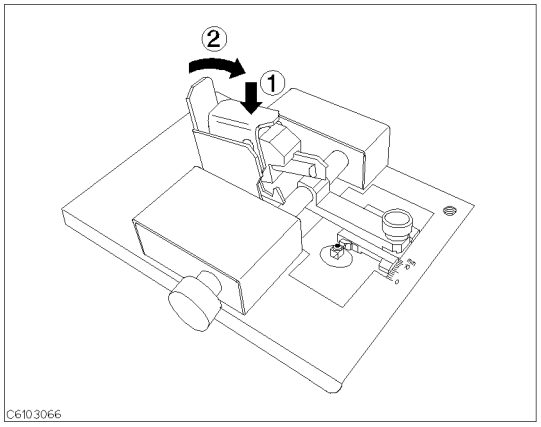

7. ① Press the arm latch. ② Turn down the pressure arm.

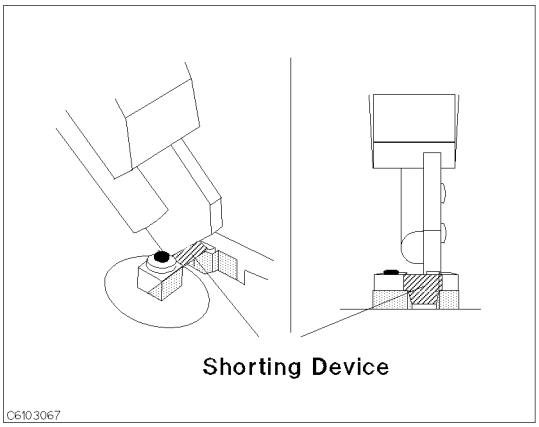

8. Verify that pressure arm presses the shorting device.

SHORT Compensation Key Sequence

1. Press (Cal) `FIXTURE COMPEN` `COMPEN MENU` `SHORT`.

2. After the short compensation sequence is completed, the `SHORT` softkey label is underlined.

OPEN Compensation

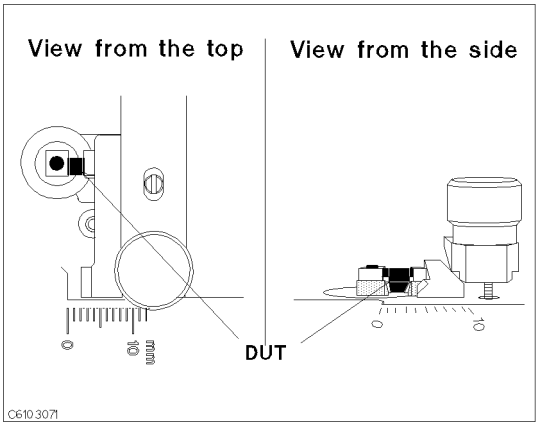

1. Place the DUT on the electrolde just as you set the shorting device in the short compensation.

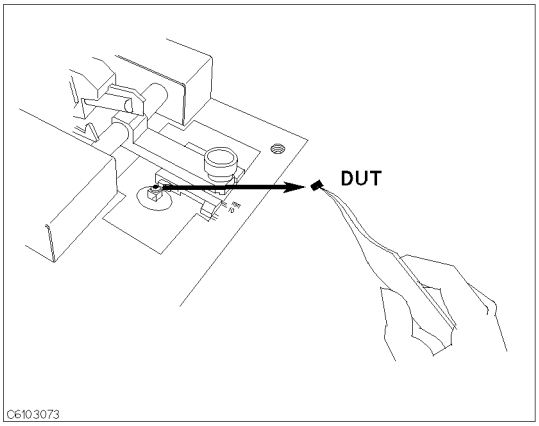

2. Remove the DUT from the electrodes.

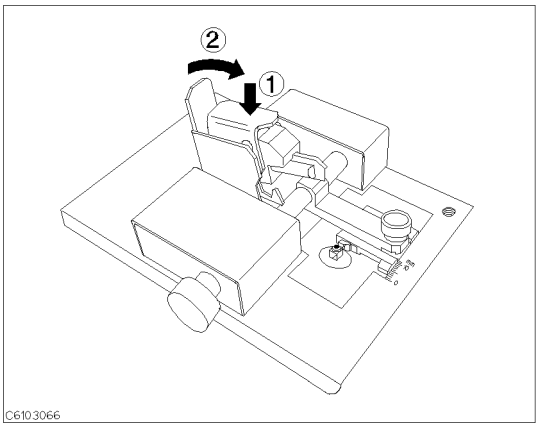

9. ① Press the arm latch. ② Turn down the pressure arm.

OPEN Compensation Key Sequence

1. Press `OPEN`.
2. After the open compensation sequence is completed, the `OPEN` softkey label is underlined.
3. Press `DONE: COMPEN`.
4. Verify that two `CMP` notations appear on the left side of the display.

Connecting DUT

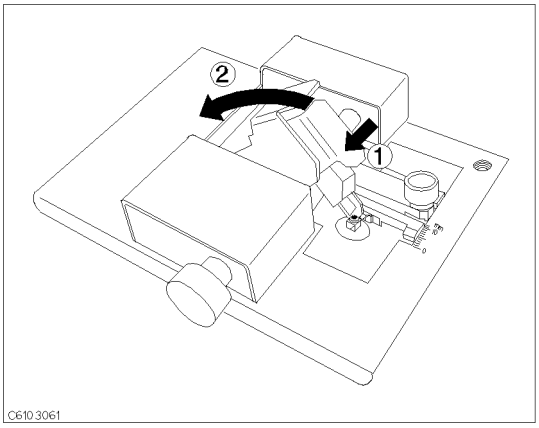

1. ① Latch off the arm latch. ② Hold up the pressure arm.

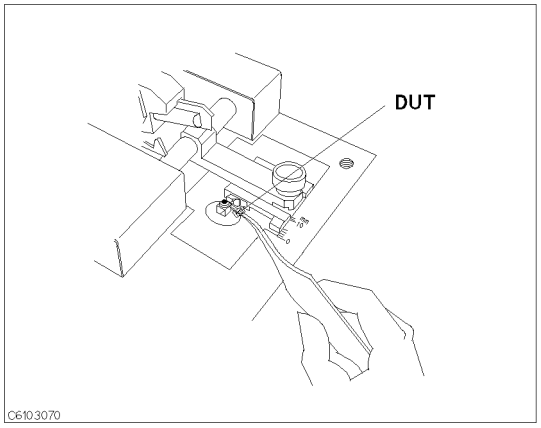

2. Place the DUT on the electrodes.

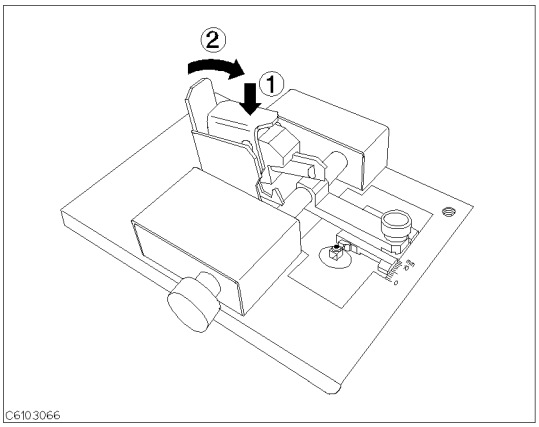

3. ① Press the arm latch. ② Turn down the pressure arm.

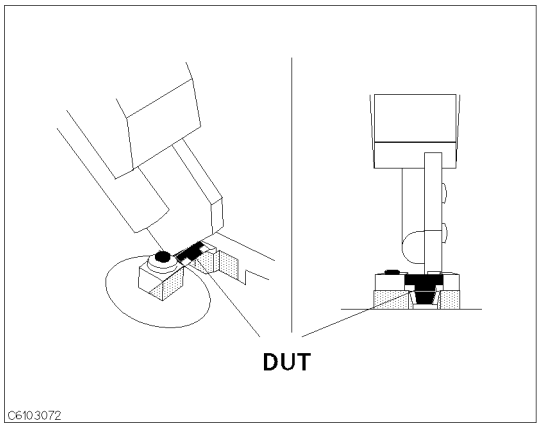

4. Verify that pressure arm presses the DUT.

16193A

SHORT Compensation

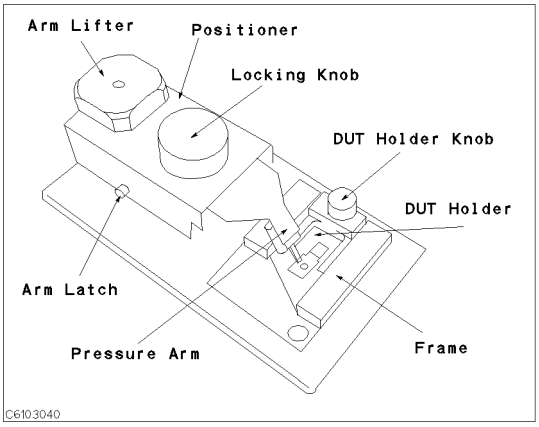

The names of each part are listed above.

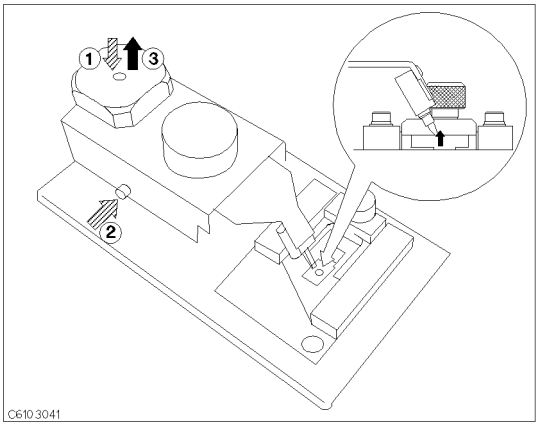

1. ① Push the arm lifter. ② Push the arm latch button. ③ Release the arm lifter while pushing the arm latch button so that the pressure arm is held.

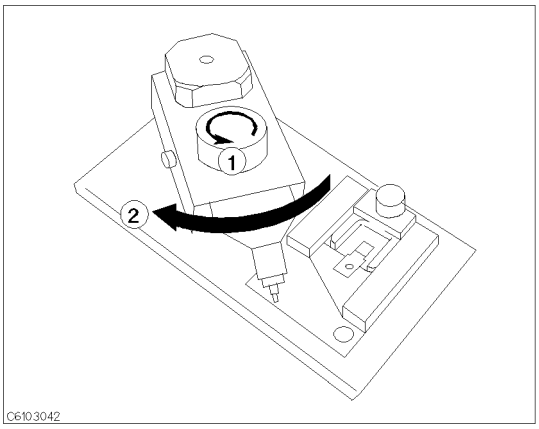

2. ① Loosen the locking knob. ② Rotate the positioner until the nose of the pressure arm is located outside the stage.

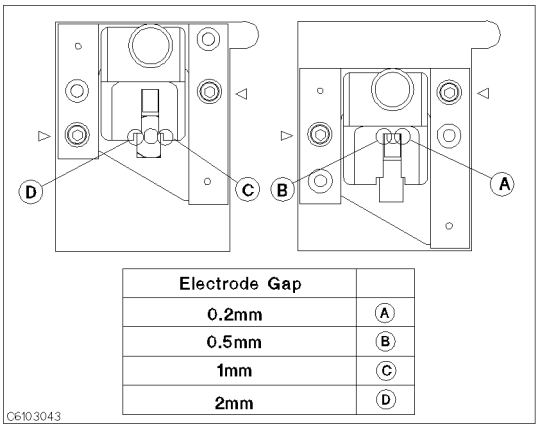

Electrode Gap	
0.2mm	A
0.5mm	B
1mm	C
2mm	D

3. Position the size selection frame depending on the size of the DUT. (This procedure shows the case for D as an example.)

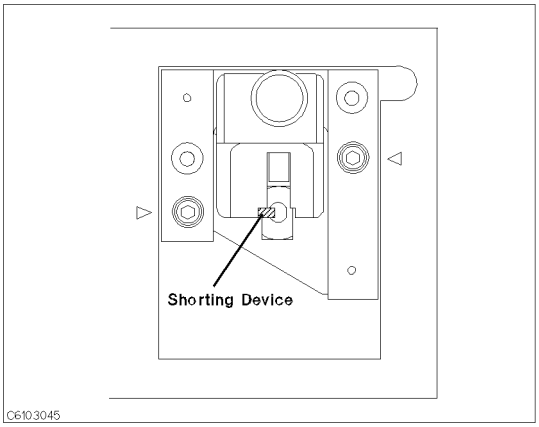

4. Place the shorting device on the electrode.

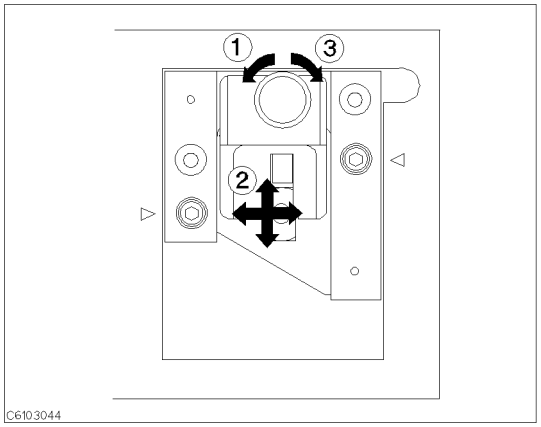

5. ① Loosen the knob. ② Position the DUT holder so that the short bar contacts both electrodes. ③ Tighten the knob to fix the DUT holder.

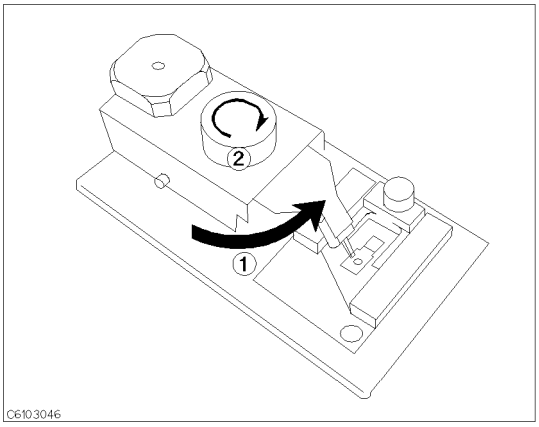

6. ① Reposition the positioner so that the nose of the pressure arm is just above the shorting device. ② Tighten the locking knob.

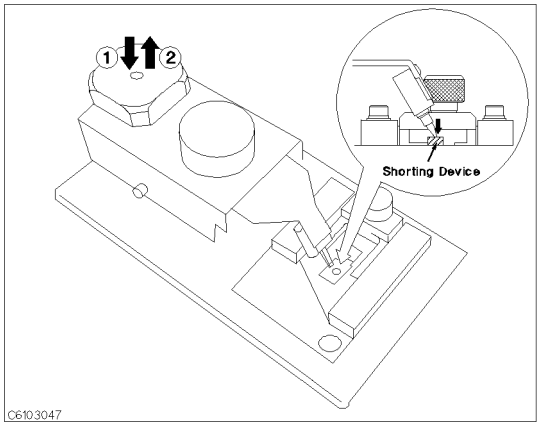

7. ① Push the arm lifter so that the arm latch is released. ② Let down the pressure arm to press down the shorting device.

SHORT Compensation Key Sequence

1. Press (Cal) `FIXTURE COMPEN` `COMPEN MENU` `SHORT`.

   After the short compensation sequence is completed, the `SHORT` softkey label is underlined.

OPEN Compensation

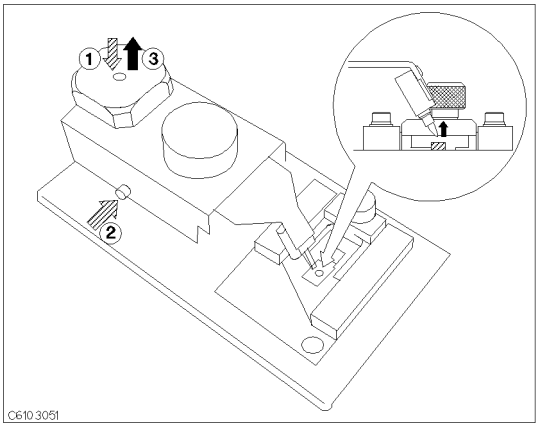

1. ① Push the arm lifter. ② Push the arm latch button. ③ Release the arm lifter while pushing the arm latch button so that the pressure arm is held.

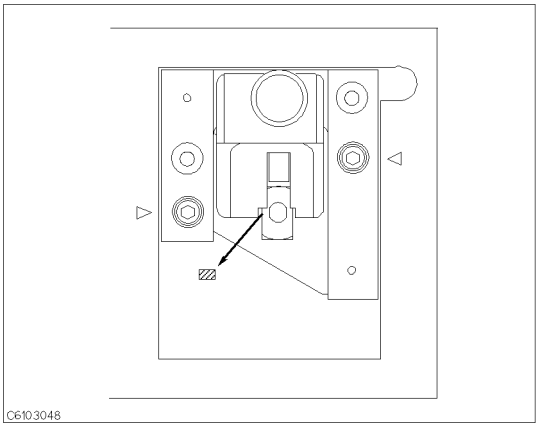

2. Remove the shorting device.

OPEN Compensation Key Sequence

1. Press `OPEN`.
2. After the open compensation sequence is completed, the `OPEN` softkey label is underlined.
3. Press `DONE: COMPEN`.
4. Verify that two `CMP` notations appear on the left side of the display.

Connecting DUT

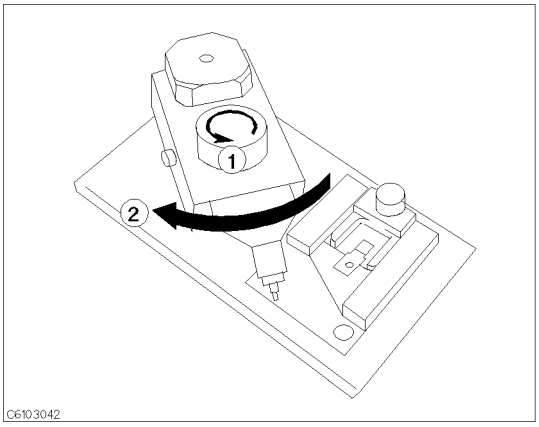

1. ① Loosen the locking knob. ② Rotate the positioner until the nose of the pressure arm is located outside the frame.

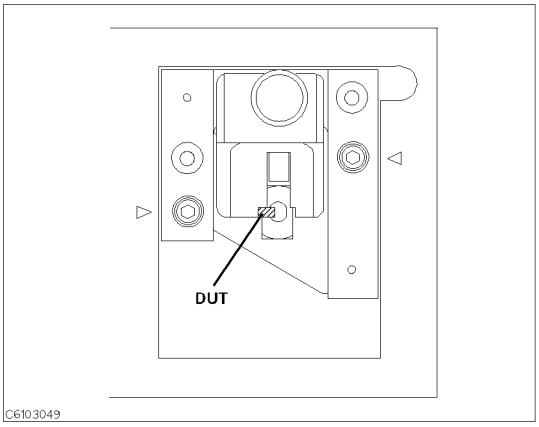

2. Place the DUT on the electrode.

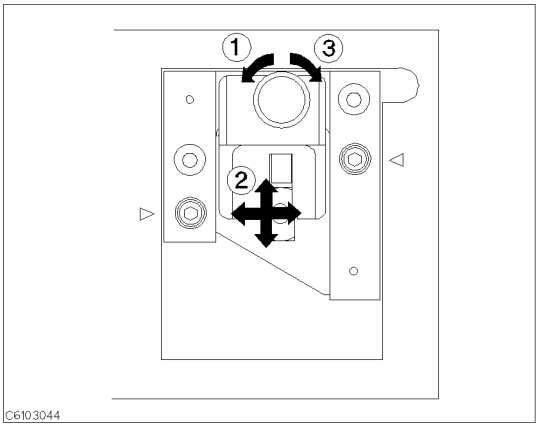

3. ① Loosen the knob. ② Position the DUT holder so that the DUT contacts both electrodes. ③ Tighten the knob.

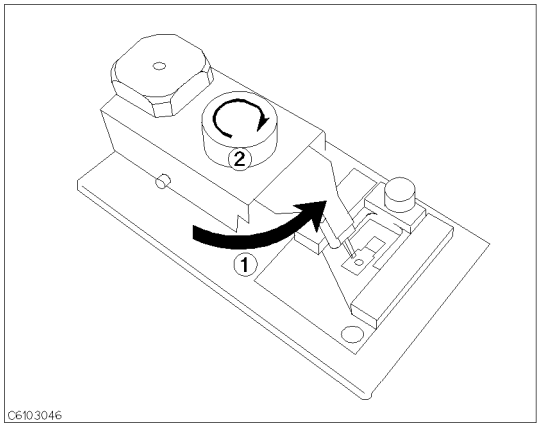

① Reposition the positioner so that the nose of the pressure arm is just above the DUT. ② Tighten the locking knob.

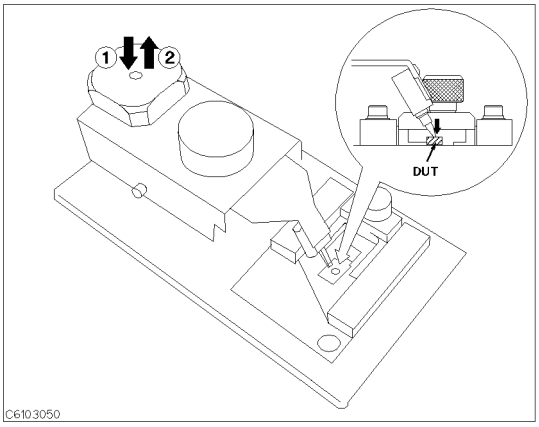

3. ① Push the arm lifter so that the arm latch is released. ② Let down the pressure arm to press down the DUT.

D

Fixture Compensation Procedures for the 16194A

Exchanging the device holder

The 16194A can hold both leaded devices and surface mount devices by exchanging the device holder. The exchanging procedure is as follows.

1. Remove the ground plate.
2. When measuring a surface mount device, attach the knob on the device holder as shown in Figure D-1.
3. Select the device holder suitable for the device type. Loosen its knob and insert it into the arm.
4. Set the ground plate.

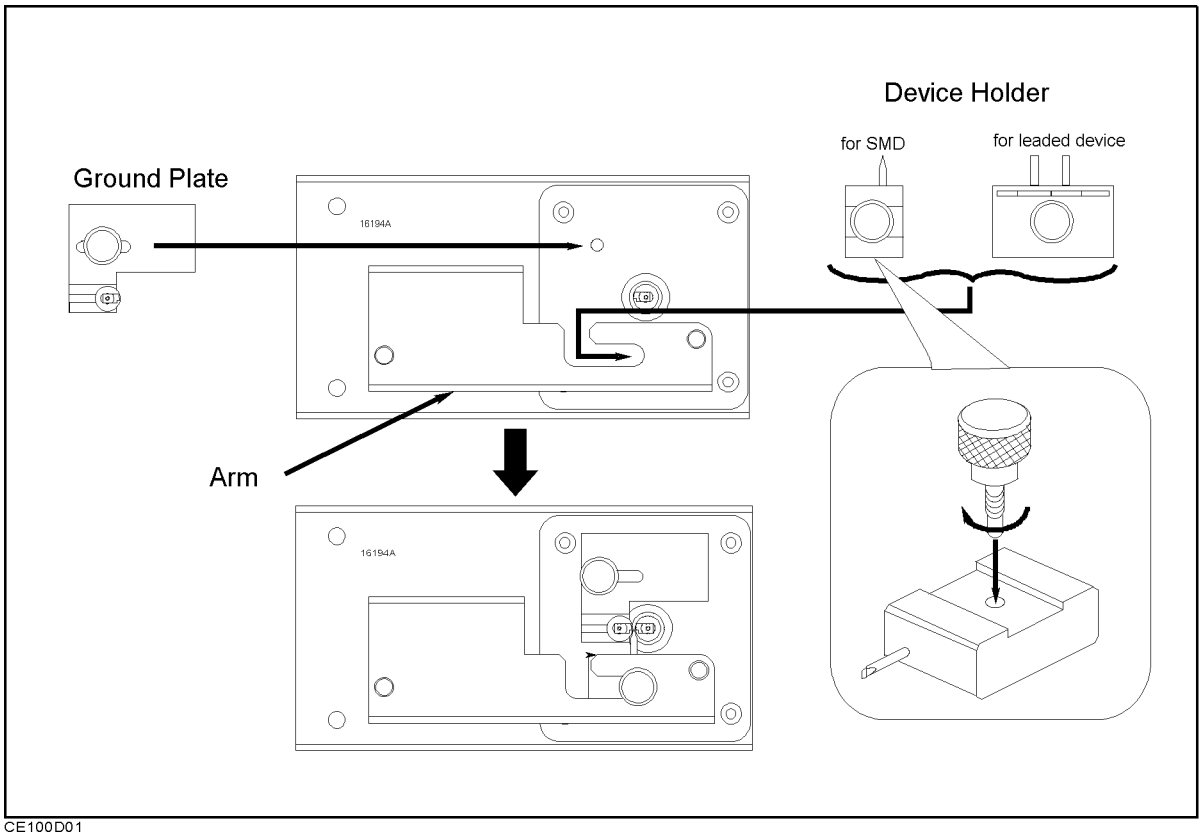

CE100D01

Figure D-1. Exchanging the Device Holder

Warning **The 4291B has the capability for –55 °C to +200 °C temperature measurement in environmental testing. Use gloves to prevent burns when handling heated parts.**

Connecting the Test Fixture

This section descibes how to connect 16194A with option 013 and 014 test head and fixture station.

1. Calibrate your analyzer at the APC-7® connector plane before connecting the test fixture.
2. Place the fixture on the APC-7® connector.
3. Tighten (turn counterclockwise) the coupling nut of the APC-7® connector.

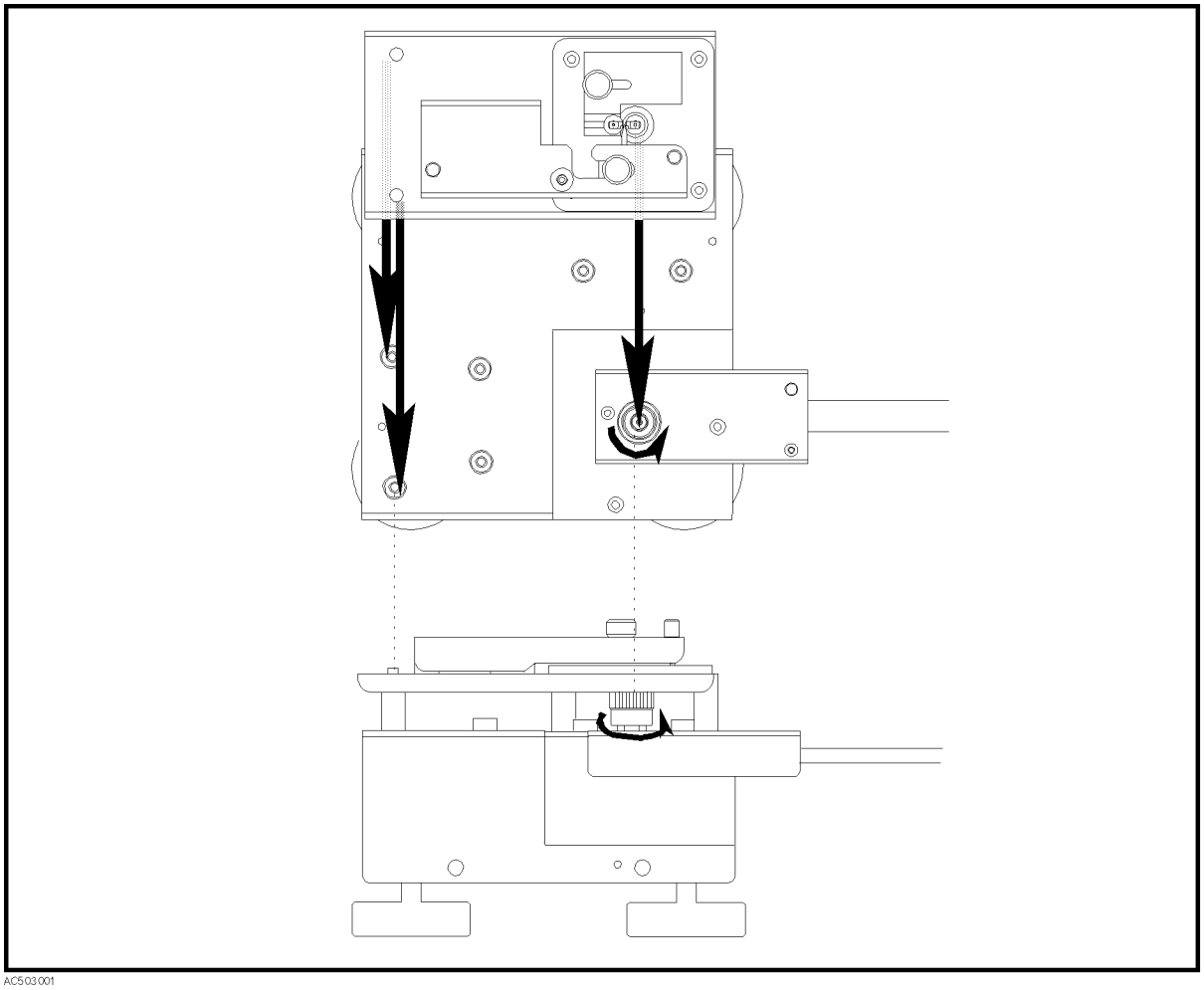

Figure D-2. Connecting the 16194A to the Measurement Terminal

Setting

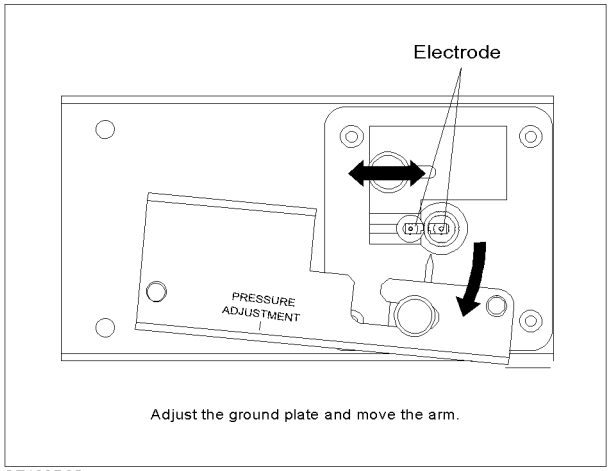

CE100D05

Figure D-3.

Adjust the arrow points to fix a DUT, a short device and load device.

- For SMD, adjust the device holder's posisions to fix DUT, a short device and load device.
- For lead device, adjust the pin positions for DUT size. And fix the grand plate's knob.

Press 4291B's key.

1. For load compensation, press (Meas) `FIXTURE` `IMPEDANCE[NONE]`.
2. Without load compensation, press (Meas) `FIXTURE` `SELECT FIXTURE` `16194`.

SHORT compensation

- For SMD, choose a short device which is same size as DUT. And fix it on electrode with the arm.
- For leaded device:
  1. Move the arm outside.
  2. Move the ground plate to fit the short device's size.
  3. Place the short device on the electrodes and press it with the device holder (Figure D-4).

  When placing a leaded device, put its leads on the notch of the 4291B's electrodes.

You can adjust the pressure of the arm by turning the pressure adjustment using the wrench.

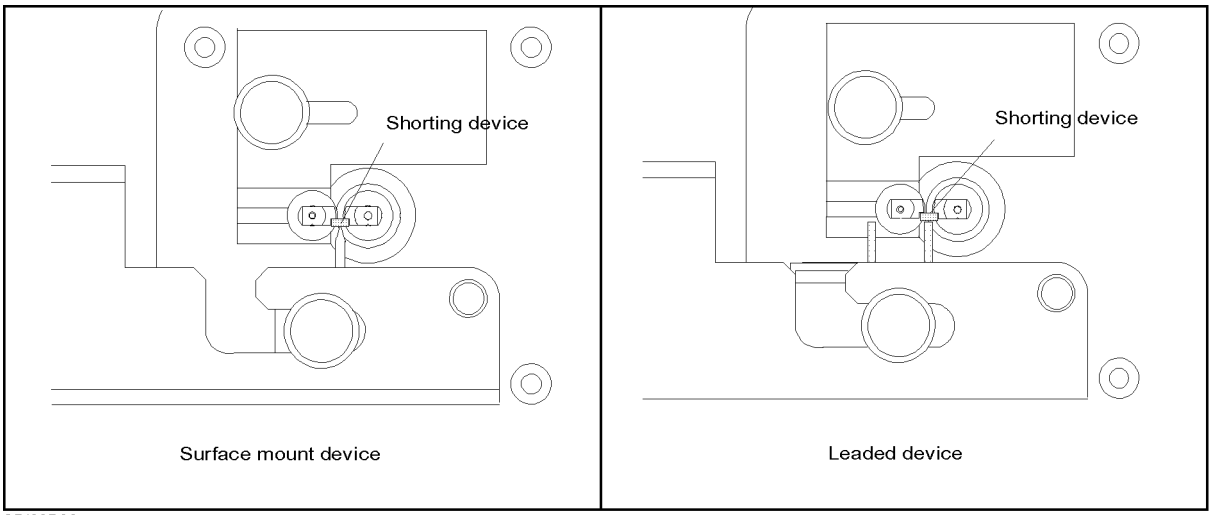

Figure D-4.

Short compensantion key syquence

1. Press the `FIXTURE COMPEN` `COMPEN MENU` `SHORT` under (Cal).
2. Confirm that the `SHORT` softkey label is underlined, after the short compensation sequence is completed.

Open compensation

1. If there is any device on the electrodes, remove it.
2. When measuring a surface mount device, move the arm outward and latch it. Then make the distance between the electrodes same as the device size by adjusting the ground plate(Figure D-5).
3. When measuring a leaded device, make the distance between the electrodes and the distance between the device holder's pins same as the device size. Then press the electrodes with the device holder's pins, not latching the arm(Figure D-5).

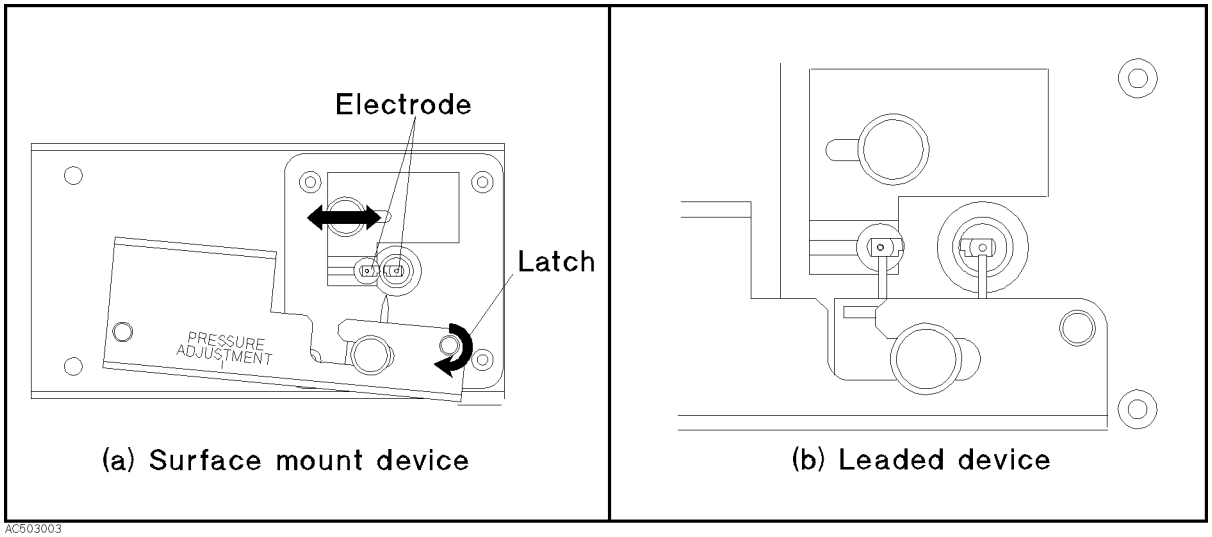

Figure D-5. Open compensation

Open compensation Key syquence

1. Press `OPEN`.
2. Confirm that the `OPEN` softkey label is underlined, after the open compensation sequence is completed.

Load compensation

1. Adjust the position of the ground plate and tighten its knob.
2. Adjust the position of the device holder so that it presses against the device. When measuring a leaded device, adjust the distance between the two pins to the device size. Then tighten the knob of the device holder.
3. Move the arm outward.
4. Place the device on the electrodes and press it with the device holder (Figure D-6).

   When placing a leaded device, put its leads on the notch of the 4291B's electrodes.

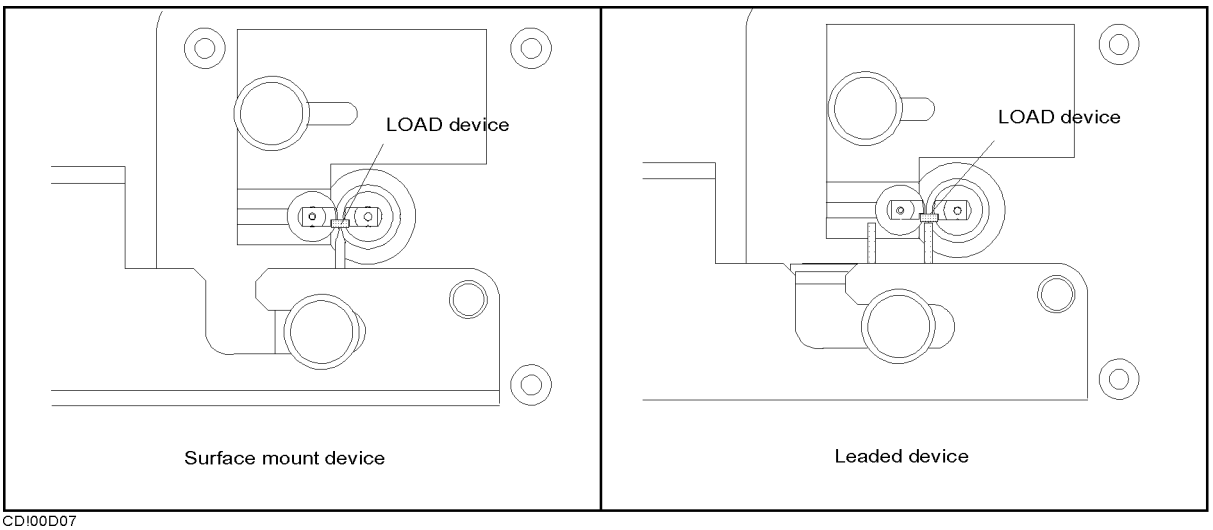

CDI00D07

Figure D-6. Load compensation

Load compensation Key sequence

1. Press `LOAD`.
2. Confirm that the `LOAD` softkey label is underlined, after the load compensation sequence is completed.
3. Press `DONE: COMPEN`.
4. Verify that two `CMP` notations appear on the left side of the display.

DUT

1. Adjust the position of the ground plate and tighten its knob.
2. Adjust the position of the device holder so that it presses against the device. When measuring a leaded device, adjust the distance between the two pins to the device size. Then tighten the knob of the device holder.
3. Move the arm outward.
4. Place the device on the electrodes and press it with the device holder (Figure D-7).

   When placing a leaded device, put its leads on the notch of the 4291B's electrodes.

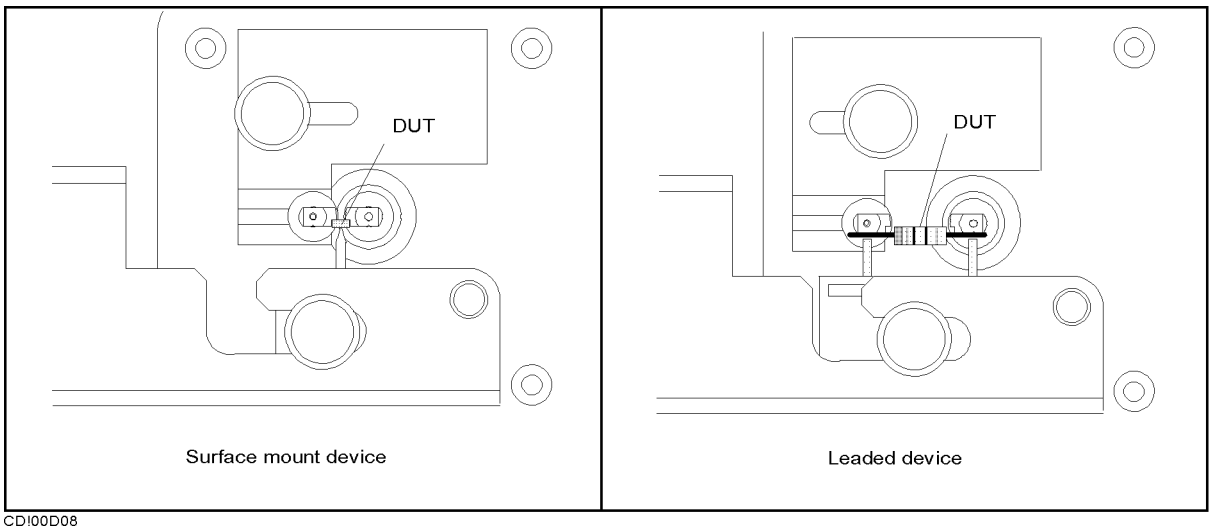

CDI00D08

Figure D-7. DUT

E

Calibration and Compensation

Calibration

Calibration is used to define the "Calibration Plane" at which the specified measurement accuracy can be obtained. To calibrate an analyzer, the 0 S, 0 Ω, and 50 Ω standards from the Calibration Kit are connected at the calibration plane. The analyzer is then calibrated so that it measures within its specified accuracy. In the case of 4291B, the calibration plane is at the APC-7® connector.

Compensation

Compensation reduces the effects of the error sources existing between the DUT and the analyzer's calibration plane. Compensation, however, cannot always completely remove the error. Therefore, the measurement accuracy obtained after compensation is not as good as that obtained at the "Calibration Plane." Compensation is not the same as calibration and cannot replace calibration. The measurements required for compensation depend on the calibration accuracy of the analyzer, so compensation must be performed after calibration has been completed. Compensation improves the effective measurement accuracy of an analyzer. In the case of 4291B, Electrical Length Compensation and Fixture Compensation (Open/Short/Load) are in compensation category.

Electrical Length Compensation and Fixture Compensation are used in the following combinations:

- OPEN/SHORT Fixture Compensation and Electrical Length Compensation
- OPEN/SHORT/LOAD Fixture Compensation

OPEN/SHORT Fixture Compensation and Electrical Length Compensation

This is the basic compensation technique used in the 4291B. OPEN and SHORT Fixture Compensations assume that the residuals of the test fixture can be represented by the simple L/R/C/G circuit shown in Figure E-1. When the fixture electrodes are open, stray admittance `Go+jωCo` is measured as `Yo`. When the fixture electrodes are shorted, the measured impedance represents `Rs+jωLs` directly. Thus, each residual parameter value is known and the DUT value `Zdut` is calculated from the equation as shown in Figure E-1.

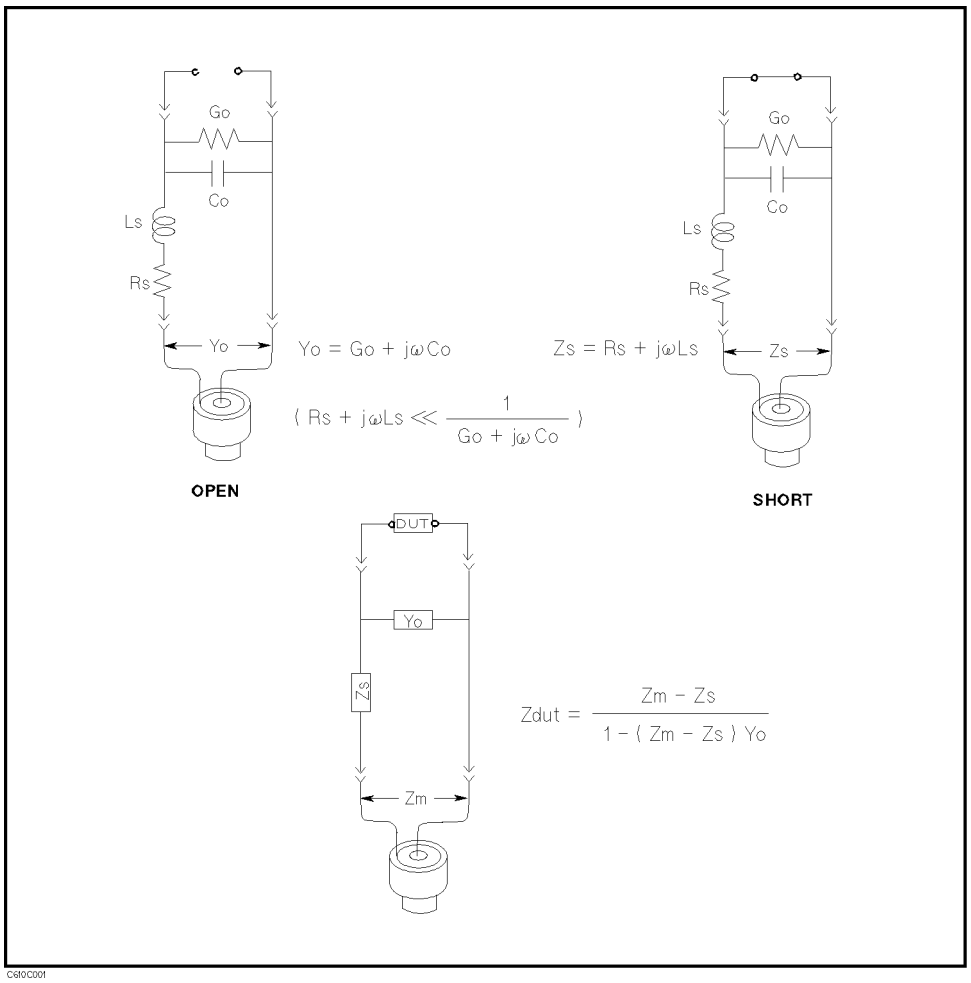

Figure E-1. OPEN/SHORT Fixture Compensation

OPEN/SHORT Fixture Compensation corrects for the residuals of the test fixture. However, it cannot reduce a phase-shift induced error. Electrical Length Compensation can compensate for this error.

OPEN/SHORT/LOAD Fixture Compensation

OPEN/SHORT/LOAD Fixture Compensation is an advanced compensation technique that is applicable to complicated residual circuits. Because LOAD Fixture Compensation corrects the phase-shift induced error, the Electrical Length Compensation is not required. The key point in OPEN/SHORT/LOAD Fixture Compensation is to select a LOAD whose impedance value is accurately known and stable, and whose size is the same as the DUT.

Index

A

`ACI` program , 6-12
active marker , 6-16
ALC , 6-11
ASCII save , 6-21
`AUTOREC` , 6-20
averaging , 6-3

B

BACK UP MEMO DISK , 6-19

C

calibration
  fixed , 6-2
  user defined, 6-2
`CAL POINTS [USER]` , 6-2
cleaning , 2-8
`CLEAR SUB MKR` , 6-16
`COMPEN POINTS [USER]` , 6-3
conditions
  operation, 2-8

D

`DATA MATH [DATA]` , 6-19
dc bias
  monitor , 6-7
delay , 6-5

E

Equivalent Circuit Analysis , 3-23

F

file
  purge , 6-21
file format
  DOS , 6-21
  LIF , 6-21
fixture compensation
  fixed , 6-3
  user defined, 6-3
fuse selection, 2-7

G go/no-go test , 6-8

H handle
installing , 2-9
handle and rack
mounting , 2-10

I initialize , 6-21
installation, 2-1
rack/handle , 2-9

L label function , 6-13
`LABEL MENU` , 6-13
`LEVEL MON` , 6-7
level monitor , 6-7
limit line/testing , 6-8
list sweep , 6-10
log
program , 6-22

M manual changes, A-1
marker
marker list , 6-16
max point , 6-17
min point , 6-17
target , 6-17
marker , 6-16
memory trace , 6-17
`MKR LIST` , 6-16

N number of points , 6-6

O operation conditions, 2-8
option 1CM rack mount kit , 2-9
option 1CN handle kit , 2-9
option 1CP rack mount & handle kit , 2-10
OSC level
monitor , 6-7

P point averaging , 6-3
point delay , 6-5
Power Cable, 2-5
print
display image , 6-21
`PRINT` , 6-21
program
log , 6-22
purge file , 6-21

R rack/handle installation , 2-9
rack mounting , 2-9
recall
  analyzer setting , 6-20
  automatically , 6-20
  measurement trace , 6-20
requirement
  ventilation, 2-8
`RESTMDISK` , 6-19

S sample program disk , 6-11, 6-12
save
  analyzer setting , 6-20
  display image , 6-20
  measurement trace , 6-20
serial number, A-2
Split Display , 6-15
spreadsheet , 6-21
sub-marker
  using , 6-16
`SUB MKR` , 6-16
sweep
  list , 6-10
sweep averaging , 6-4
sweep delay , 6-5

T text with tab delimiter , 6-21
TIFF , 6-20
trace
  memory , 6-17
trace math function , 6-19

U uncoupled channel , 6-15
user defined calibration , 6-2
user defined fixture compensation , 6-3

V ventilation requirement, 2-8